DAIKIN

SiAUY361411EA

R-410A

Service Manual

Gas Heat Pump Air Conditioner

Heat Recovery R-410A 50 Hz

GYEQ20/30AN

Gas Heat Pump Air Conditioner Heat Recovery R-410A 50 Hz

ED Reference

For items below, please refer to Engineering Data.

No.	Item	ED No.	Page
1	Specification – Indoor Unit	EDAU361403	16-17, 32-33, 48-49, 76-77, 94, 108-109, 126-128, 146-147, 166-168, 194, 206, 220-221, 234-237, 256
2	Specification – Outdoor Unit	EDAU361402	40
3	Piping Diagram	EDAU361402	44
4	Accessories	EDAU361402	56

1. Introduction iv
1.1 Safety Precautions v

Part 1 General Information 1

1. Model Names 2
1.1 Indoor Units 2
1.2 Outdoor Units 3
1.3 BS Units 3
1.4 Air Treatment Equipment 3
2. External Appearance 4
2.1 Indoor Units 4
2.2 Outdoor Units 5
2.3 BS Units 5
2.4 Air Treatment Equipment 5
3. Capacity Range 6
3.1 Combination Ratio 6
3.2 Indoor Unit Connection Capacity 6
3.3 Heat Recovery Operation 6

Part 2 Device Overview 7

1. Model Naming 8
2. Unit Specifications 9
3. External Diagrams 10
4. Structural Diagrams 12
5. System Diagrams 14
5.1 Refrigerant System Diagrams 14
5.2 Cooling Water, Intake Air, Fuel and Engine Oil System Diagram 23

6. Sensor Mounting Positions 25
6.1 Sensors Installed on the Engine.....25
6.2 Sensors Installed in the System 26
7. Electrical Wiring Diagrams 27
8. Installation Work Manual 28
9. Wiring Manual 57
10. Test Run Manual 67

Part 3 Control and Functionality 89

1. Control Overview.....90
1.1 System Control Overview.....90
1.2 Startup Sequences.....93
1.3 Actuators 95
1.4 Setting Up and Rewiring the Outdoor Unit 96
2. Outdoor Unit Control 98
3. Actuator Control 103
3.1 Electric Motor Operated Valve Control.....103
3.2 Pump Control 107
3.3 Fan Control.....107
3.4 Heater Control 107
3.5 Starter Control 107
3.6 Compressor Clutch Control 107
3.7 Ignition Timing Control 108

Part 4 Troubleshooting 109

1. Troubleshooting the Outdoor Unit 110
1.1 Error Codes 110
1.2 How to Use the Checker on PCB 113
1.3 RUN Mode.....115
1.4 STOP Mode.....121
1.5 Main Operations in Servicing 125
2. Flow Charts for Troubleshooting 128
2.1 Problems without Error Codes 128
2.2 Problems with Error Codes 131

Part 5 Parts Inspection 169

1. Inspecting the Outdoor Unit 170
1.1 Safety Precautions for Inspecting or Servicing the Outdoor Unit 170
1.2 Inspecting the Starter System 171
1.3 Inspecting the Fuel Control System 173
1.4 Inspecting the Mixer System 174
1.5 Inspecting the Ignition System 176
1.6 Inspecting the Regulator 179
1.7 Inspecting the Valve Clearance.....179
1.8 Inspecting the Compression Pressure 180
1.9 Inspecting the Belt.....180
1.10 Inspecting the Air Cleaner 181
1.11 Inspecting the Breather Hose.....181
1.12 Inspecting the Engine Oil Level.....182

1.13 Inspecting Refrigerating Machine Oil and Refrigerant.....183
1.14 Inspecting the Cooling Water Filter 184
1.15 Checking the Cooling Water System for Water Leaks 184
1.16 Inspecting the Cooling Water Level.....185
1.17 Inspecting the Water Motor-operated Valve.....185
1.18 Inspecting the Thermostat.....186
1.19 Inspecting the Cooling Water Concentration.....187
1.20 Inspecting the Oil Pressure Switch.....187
1.21 Inspecting the Cooling Water Temperature Sensor 187
1.22 Inspecting the Exhaust Temperature Sensor.....188
1.23 Inspecting the Compressor 189
1.24 Inspecting the Compressor Clutch 190
1.25 Inspecting the Solenoid Valves 191
1.26 Inspecting the Outdoor Fan Motor.....192
1.27 Inspecting the Refrigerant Amount.....193
1.28 Inspecting the Check Valve.....194
1.29 Inspecting the Electronic Expansion Valve 195
1.30 Checking Stop Valve Operation 196
1.31 Inspecting the Four-way Valve.....197
1.32 Inspecting the SC Coil.....197
1.33 Inspecting the Refrigerant System Sensors.....198
1.34 Inspecting the Outdoor Unit's Circuit Boards and Power Supply System 200
1.35 Inspecting the Communication Cables.....200
1.36 Inspecting the Heaters 201

Part 6 Replacement of Parts 202

1. Precautions to Take before Replacement.....203
   1.1 Safety Precautions 203
   1.2 Safety Precautions for Replacement.....203
2. Replacement of Primary Parts 204
   2.1 Replacing the Engine 204
   2.2 Replacing the Compressor.....206
   2.3 Replacing the Compressor Heater.....209
   2.4 Charging the Refrigerating Machine Oil 209
   2.5 Charging the Refrigerant.....210
   2.6 Removing the Control Box 210

Part 7 Maintenance / Service Data 211

1. Maintenance.....212
   1.1 Periodic Inspection Items, Quantities, and Standard Values for the Outdoor Unit 212
   1.2 Periodic Inspection Procedure for the Outdoor Unit.....213
2. Servicing Data.....225
   2.1 Resistance/Temperature Characteristics of Various Sensors.....225
   2.2 Pressure/Voltage Characteristics of Pressure Sensors 226
   2.3 Pressure/Saturation Temperature Conversion Chart for Outdoor Unit Pressure Sensors 227
   2.4 Tightening Torque Table 228
   2.5 Standard Operation Data (Reference Values) 230

1. Introduction

This service manual covers the **GYEQ20AN and GYEQ30AN** outdoor unit models of the Yanmar Gas Heat Pump system, and the indoor units that can be connected to these models.

The following safety alert symbols are used throughout this service manual to highlight safety precautions so that you can safely perform maintenance and servicing tasks in accordance with the instructions contained in the manual:

⚠: This safety alert symbol appears with particularly important instructions. Make sure you follow the instructions.

⚠ **Warning**	**Indicates that there is a possibility that a fatal accident or serious injury may result from failure to take sufficient safety precautions.**
⚠ **Caution**	**Provides instructions for safe handling or indicates that there is a possibility that an injury or a serious breakage of the product may result from failure to take sufficient safety precautions.**

This manual uses the following icons to highlight safety precautions you must follow to prevent accidents that may occur while inspecting or repairing the unit as well as to ensure safety after you have completed the tasks:

Icon	Title	Description
	Prohibited	Indicates a prohibited action.
	Mandatory	Indicates a mandatory action.
	Connect to ground	Instructs you to make a ground connection without fail.
	Caution: Electric shock!	Indicates that you may possibly get an electric shock under certain situations.
	Caution: High temperature!	Indicates that you may possibly get burned or otherwise injured due to high temperatures under certain situations.
	Caution: Rotating parts!	Indicates that removing a guard or protector for a rotating part (such as a motor or a fan) could possibly result in an injury.

1.1 Safety Precautions

■ **Safety precautions**

Safety precautions to take before and during inspection or repair

Warning	Before you perform disassembly and assembly, be sure to turn OFF the main power switch. Take extreme care not to touch the charging unit during work; otherwise you may get an electric shock, possibly resulting in a fatal accident or serious injury.
	While the power is being supplied, some electrical parts are charged with high voltages from 200 V to 300 V. Inadvertently touching such high-voltage parts could result in a possibly fatal electric shock. When accessing the electrical system (for example, to locate faulty parts), take sufficient care not to inadvertently touch the charging unit. Also, be sure to disconnect the main power connector from the outlet before replacing parts.
	If refrigerant gas is leaking, pinpoint and permanently fix the leaking spot, rather than merely charging the refrigerant. After fixing the leaks, charge the refrigerant and then recheck for any leaks. If you cannot pinpoint the leaking spot and thus cannot continue the repair work, recover the refrigerant and then close the servicing valve. Failure to recover the refrigerant could cause the refrigerant gas to leak into the air-conditioned room. The refrigerant itself is harmless but can cause the generation of toxic gas when it is exposed to high temperatures associated with a fan, heater, stove, burner, or the like.
	When working in high places, be sure to use a helmet and/or lifeline in case you topple or fall; otherwise, you could face a greater risk of a fatal accident or serious injury.
	When you repair parts contained in a compartment (particularly the engine room) inside a unit such as an outdoor unit with the unit's panels removed, be sure to wear protective gloves and other clothing to prevent injuries that may occur as the result of inadvertently touching protrusions or edges inside the unit and follow the specified procedure.
Caution	If you have to repair parts with the power ON, be sure to attach a protective cover before turning ON the power. Working without a protective cover attached could possibly result in an electric shock or injury.
	When accessing a compressor to check for or repair faulty parts, never touch the compressor with bare hands while it is operating or when it has just stopped; otherwise, you could get burned.
	When installing a fan, properly tighten the fan screw. If poorly tightened, the fan may come off while operating, possibly resulting in an injury.
	Do not work in an improper position when you carry or move a heavy object. Working in an improper position could result in an acute low back pain or an injury due to dropping of a heavy object.
	When repairing parts, use tools that suit your purpose. Using inappropriate tools could result in an injury.
	During repair work, take sufficient care to keep away people other than service engineers, because unexpected dangers may be present.

Safety precautions to take after inspection or repair

Warning	Upon completion of repair work, check the insulation with a mega ohmmeter (insulation resistance tester) to make sure that the insulation resistance is 2 MΩ or higher. If the insulation resistance is lower than 2 MΩ, an electric shock or fire may possibly result; therefore, inspect electrical parts, lead wires, and other related parts and replace any faulty parts.
	During repair work, check lead wires, connector terminals, power cords, main power connector, and other related parts for contamination or deterioration. Replace any flawed or deteriorated parts, which may possibly cause an electric shock or fire.
	When any lead wire is found disconnected, reconnect the lead wire properly, for example, by using a nylon connector or by twisting and then soldering the conductors. Poor connections may possibly result in an electric shock or injury.
	Check the main power connector for accumulated dust and shakiness, and plug it in properly. Using the main power connector with dust accumulated on it or without plugging it in properly could result in an electric shock or fire.
	The product must be securely installed on a solid surface that can fully bear the product's weight and vibration during operation. Never install the product (indoor or outdoor unit) either on a surface that cannot bear the product's weight and vibration during operation or in an unstable way; otherwise, the product may fall, possibly resulting in a fatal accident or serious injury.
	Never modify the product in any way. Modifying the product could result in an electric shock, overheating, or fire.
	When relocating the unit, securely install it on a surface that can bear its weight. Never install the unit either on a surface that cannot bear the product's weight and vibration during operation or in an unstable way; otherwise, the unit may fall, possibly resulting in an injury.
	Use specified cables for wiring between outdoor and indoor units. The cables should be perfectly connected to the appropriate connectors and fastened tightly so that the terminal connectors will not be exposed to external forces via the cables. Using cables without properly connecting and fastening them could result in overheating or fire.
	The cables between outdoor and indoor units must be organized so that the terminal covers will not rise. The terminal covers must be properly attached. Using the cables without properly attaching the covers could result in an electric shock, overheating, or fire at the terminal connections.
	The power cord must not be modified and must be replaced if broken. Also, the power cord must not be combined with an extension cord or share the same outlet as other electrical appliances via a power strip or the like because doing so could result in an electric shock or fire. The power cord must not be loaded with something heavy, heated, or pulled because doing so could result in breakage.
	If refrigerant gas is leaking, pinpoint and permanently fix the leaking spot, rather than merely charging the refrigerant. After fixing the leaks, charge the refrigerant and then recheck for any leaks. If you cannot pinpoint the leaking spot and thus cannot continue the repair work, perform pump down operation and then close the servicing valve. Failure to recover the refrigerant could cause the refrigerant gas to leak into the air-conditioned room. The refrigerant itself is harmless but can cause the generation of toxic gas when it is exposed to high temperatures associated with a fan, heater, stove, burner, or the like.

Safety precautions to take after inspection or repair

Caution	Any parts you use for repair must be listed on the servicing parts table specific to the model. Using unlisted parts could result in a recurring fault or fire.
	Inspect ground connections and rework them as needed. An improper ground connection could result in an electric shock.
	Replace the installation base and mounting frames if they are found deteriorated due to corrosion or some other reason. Otherwise, the unit may fall, possibly resulting in an injury.
	Never fill any refrigerants other than R-410A refrigerant. This machine has been designed and manufactured as a specialized unit for R-410A refrigerant. If a different type of refrigerant other than R-410A refrigerant is used, a mechanical fault, malfunction and failure may result, which could cause a serious safety hazard. The filled refrigerant type is described on the machine nameplate.

■ List of safety warning plates/labels

■ Types of warning/caution labels and plate

① Warning label (High temperature)

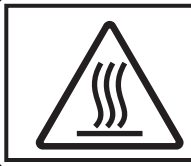

やけどの恐れあり。高温部に触れないこと

Don’t touch the high-temperature part

会引起烧伤 请勿接触高温部分

② Caution label (Stepping on parts)

けがの恐れあり。上に乗らないこと

Danger. Don't step on.

会引起受伤 不要在上面踩踏

③ Warning label (Rotating parts)

けがの恐れあり。回転部に触れないこと

Don’t touch the rotor

会引起受伤 请勿接触旋转部

④ Caution plate (Outdoor unit)

ご 注 意

1. 本体に表示してあるガス種以外の燃料ガスは使用しないでください。
2. ガス管接続には指定の強化ガスホース（または液化石油ガス継手金具付き低圧ガスホース）を使用してください。
3. 冷媒配管接続後、気密試験を行ない漏れのないことを確認してください。
4. D種接地工事を行ってください。感電の恐れがあります。※1
5. カバー類は絶対開けないでください。回転体に接触したり、巻き込まれる恐れがあり危険です。
6. 吹出口のファンカバーを絶対に取外さないでください。ファンが露出して危険です。
7. 排気ガスは周囲に悪影響の無い場所で大気開放してください。排水枡、溝等への排出は中毒の恐れがあります。
8. 排気ドレンは室内機ドレン配管と一緒にしないでください。そして大気開放された場所に排出してください。排気ガスが室内に入り危険です。
9. 排気ドレンは雑排水溝等の適切な排水溝まで配管して排出してください。コンクリート表面を汚したり、シート防水を損傷する恐れがあります。
10. 運転中異常な振動や音があるときは、ただちに運転を停止し、自分で修理せずに、お買い求めの販売店に連絡ください。
11. 排気出口より白い煙が出ることがありますが、これは異常ではありません。
12. 長期間ご使用にならない場合は、万一のガス漏れ防止のためガス元栓を閉じておいてください。ただし、元電源は切らないでください。

ガス機器防火性能評定品
可燃物からの離隔距離 (cm)

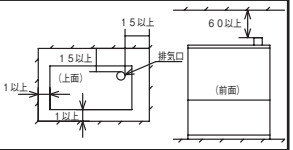

財団法人 日本ガス機器検査協会
(注)保守サービスなどに必要なスペースは据付要領書を参照のこと

フロン回収・破壊法
第一種特定製品

この製品には冷媒として、ＨＦＣが使われています。
(1) フロン類をみだりに大気中に放出することは禁じられています。
(2) この製品を廃棄・整備する場合には、フロン類の回収が必要です。
(3) フロン類の種類及び数量は、製品銘板あるいは室外機内部に貼付されたシールに記載されています。

R410A

⑤ Warning label (High voltage)

感電の恐れあり。高電圧部に触れないこと

Don’t touch the high-voltage part

会引起触电 请勿接触高电压部位

023331-02EN00

■ Attached locations of safety warning plates/labels

Outside of outdoor unit

• GYEQ20AN

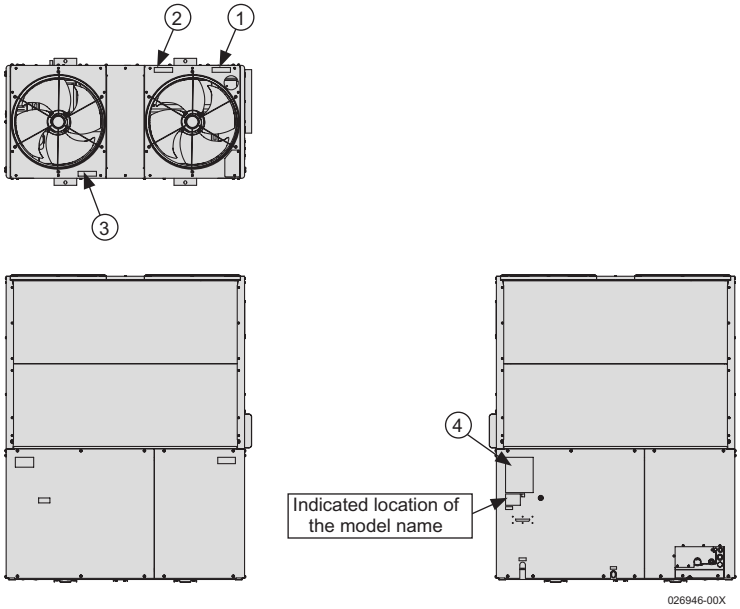

∗ Although the actual appearance is slightly different to the figure above, the location of the safety labels is the same.

• GYEQ30AN

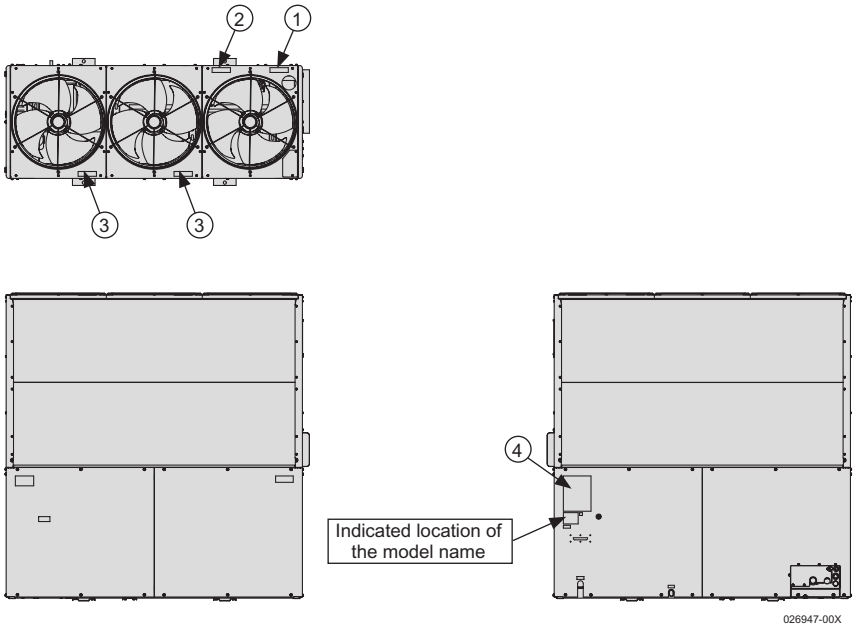

∗ Although the actual appearance is slightly different to the figure above, the location of the safety labels is the same.

The model name is displayed at locations where the following label is attached: Indicated location of the model name

023332-01EN01

Inside of outdoor unit

• GYEQ20AN

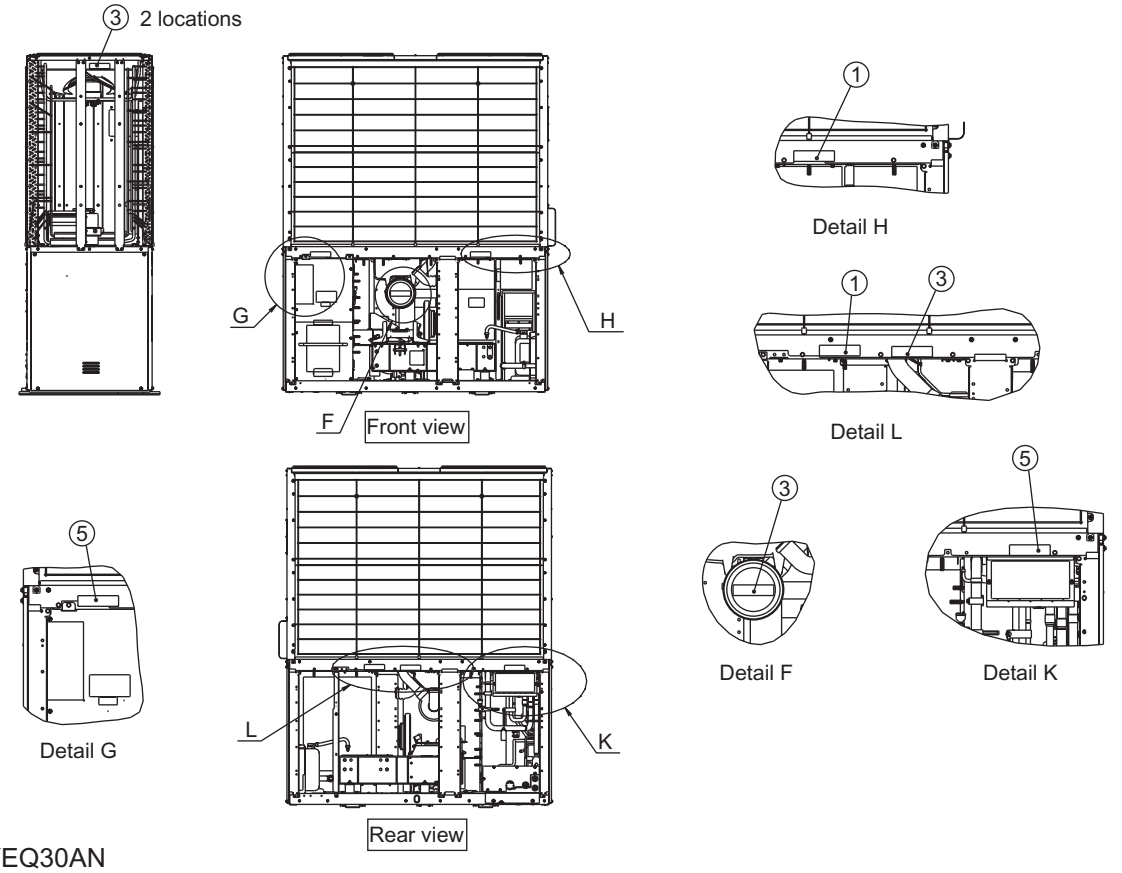

• GYEQ30AN

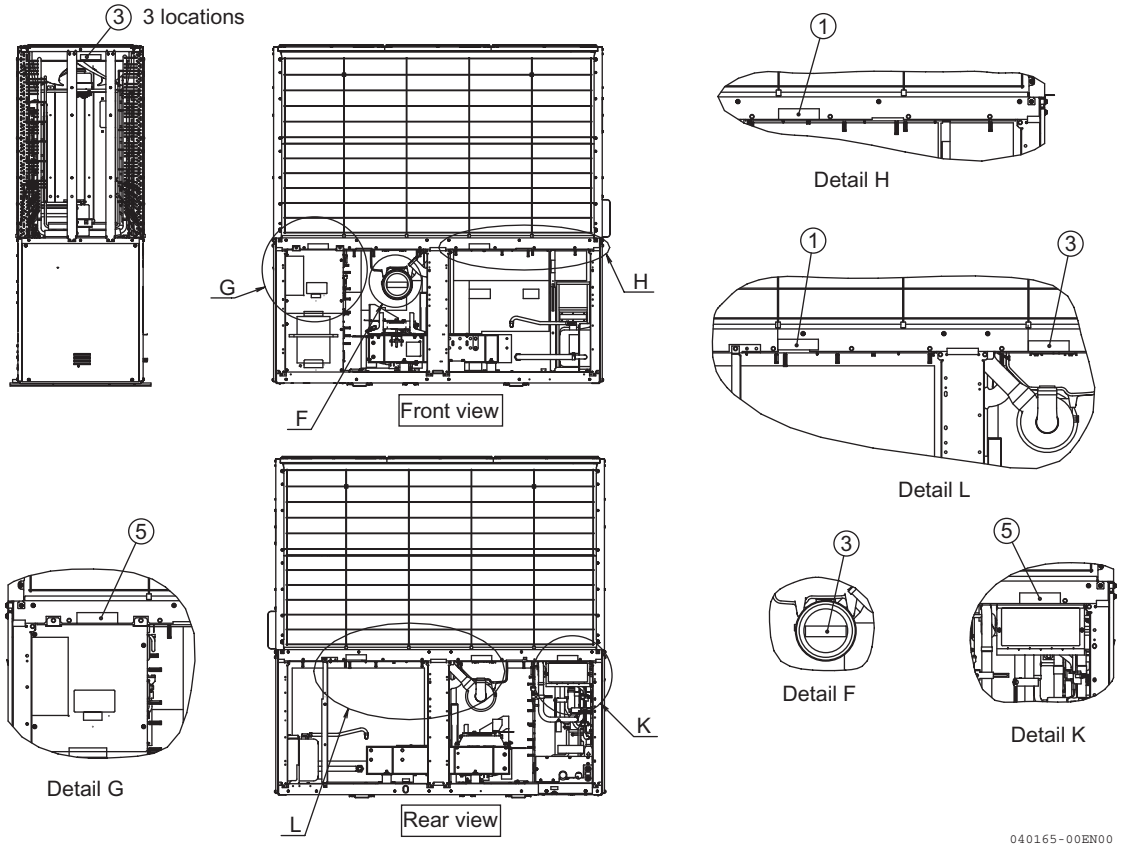

Part 1
General Information

1. Model Names 2
   1.1 Indoor Units 2
   1.2 Outdoor Units 3
   1.3 BS Units 3
   1.4 Air Treatment Equipment 3
2. External Appearance 4
   2.1 Indoor Units 4
   2.2 Outdoor Units 5
   2.3 BS Units 5
   2.4 Air Treatment Equipment 5
3. Capacity Range 6
   3.1 Combination Ratio 6
   3.2 Indoor Unit Connection Capacity 6
   3.3 Heat Recovery Operation 6

1. Model Names

1.1 Indoor Units

Indoor Units

Capacity range		2.2kW	2.8kW	3.6kW	4.5kW	5.6kW	7.1kW	9.0kW	11.2kW	14.0kW	16.0kW	16.2kW	20.0kW	22.4kW	28.0kW	Power supply, Standard
Capacity index		20	25	31.25	40	50	62.5	80	100	125	140	—	—	200	250	
Ceiling Mounted Cassette (Round Flow with Sensing) Type	FXFQ	—	25S	32S	40S	50S	63S	80S	100S	125S	—	—	—	—	—	VM
Ceiling Mounted Cassette (Round Flow) Type	FXFQ	—	25P	32P	40P	50P	63P	80P	100P	125P	—	—	—	—	—	VE
Ceiling Mounted Cassette (Compact Multi Flow) Type	FXZQ	20M	25M	32M	40M	50M	—	—	—	—	—	—	—	—	—	
Ceiling Mounted Cassette (Double Flow) Type	FXCQ	20M	25M	32M	40M	50M	63M	80M	—	125M	—	—	—	—	—	VE
Ceiling Mounted Cassette Corner Type	FXKQ	—	25MA	32MA	40MA	—	63MA	—	—	—	—	—	—	—	—	
Slim Ceiling Mounted Duct Type	FXDQ-PBVE	20PB	25PB	32PB	—	—	—	—	—	—	—	—	—	—	—	
	FXDQ-NBVE	—	—	—	40NB	50NB	63NB	—	—	—	—	—	—	—	—	
Ceiling mounted built-in type (Aus. exclusive use)	FXSYQ	20M	25M	32M	40M	50M	63M	80M	100M	125M	—	—	—	—	—	
Ceiling concealed (Duct) type (Aus. exclusive use)	FXDYQ	—	—	—	—	—	—	80MA	100MA	125MA	—	145MA	180M	200M	250M	V1
Ceiling Mounted Duct Type	FXMQ	20P	25P	32P	40P	50P	63P	80P	100P	125P	140P	—	—	—	—	VE
	FXMQ	—	—	—	—	—	—	—	—	—	—	—	—	200MA	250MA	
Ceiling Suspended Type	FXHQ	—	—	32MA	—	—	63MA	—	100MA	—	—	—	—	—	—	
Wall Mounted Type	FXAQ	20P	25P	32P	40P	50P	63P	—	—	—	—	—	—	—	—	
Floor Standing Type	FXLQ	20MA	25MA	32MA	40MA	50MA	63MA	—	—	—	—	—	—	—	—	
Concealed Floor Standing Type	FXNQ	20MA	25MA	32MA	40MA	50MA	63MA	—	—	—	—	—	—	—	—	

VE : 1 phase, 220-240/220V, 50/60Hz
V1 : 1 phase, 220-240V, 50Hz
VM : 1 phase, 220-240/220-230V, 50/60Hz

1.2 Outdoor Units

Series		Model Name		Power Supply
Heat Recovery	GYEQ	20AN	30AN	(1 phase, 220V, 50Hz)
Class		20	30	
Capacity Range		56.0kW	85.0kW	
Capacity Index		500	750	

Note: Refer to conversion table below in the chapter “Piping Work” of the installation manual.

Conversion Table

	Model Name	Cooling Rated Capacity (kW)		Capacity Index
Heat Recovery	GYEQ20AN	56.0	→	500
	GYEQ30AN	85.0		750

Total Capacity of Down-stream Indoor Units (kW)

			Capacity Index
• Refrigerant branch kit to refrigerant branch kit • Refrigerant branch kit to refrigerant branch kit	Less than 7.0 kW	→	less than 62
	7.0 kW or more but less than 22.4 kW		62-200
	22.4 kW or more but less than 33.0 kW		200-290
	33.0 kW or more but less than 47.0 kW		290-420
	47.0 kW or more but less than 71.0 kW		420-640
	71.0 kW or more		640 or more
• BS unit to refrigerant branch kit • Refrigerant branch kit to refrigerant branch kit	Less than 7.0 kW		less than 62
	7.0 kW or more but less than 22.4 kW		62-200
	22.4 kW or more but less than 28.0 kW		200-250

1.3 BS Units

Series		Model name			Power Supply
Heat recovery	BSGQ	100P	160P	250P	V1

V1: 1 phase, 220-240V, 50Hz

1.4 Air Treatment Equipment

Heat Reclaim Ventilator (VAM series)

Series		Model name									Power supply
Heat Reclaim Ventilator	VAM	150GJ	250GJ	350GJ	500GJ	650GJ	800GJ	1000GJ	1500GJ	2000GJ	VE

Note: For details, refer to Engineering Data ED71-613.

VE: 1 phase, 220-240/220V, 50/60Hz

2. External Appearance

2.1 Indoor Units

Ceiling mounted cassette (Round flow with sensing) type FXFQ-S 	Ceiling Concealed (Duct) Type (Aus. exclusive use) FXDYQ-M(A) 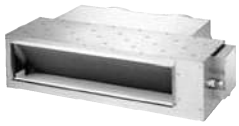
Ceiling mounted cassette (Round flow) type FXFQ-P 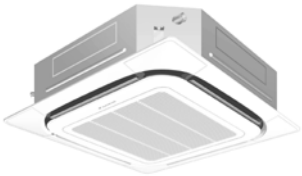	Ceiling mounted duct type FXMQ-P
Ceiling mounted cassette (Compact multi flow) type FXZQ-M 	Ceiling mounted duct type FXMQ-MA
Ceiling mounted cassette (Double flow) type FXCQ-M 	Ceiling suspended type FXHQ-MA
Ceiling mounted cassette corner type FXKQ-MA 	Wall mounted type FXAQ-P
Slim ceiling mounted duct type FXDQ-PB FXDQ-NB 	Floor standing type FXLQ-MA 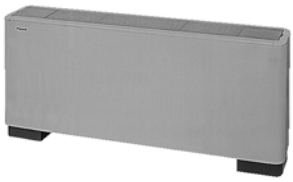
Ceiling mounted built-in type (Aus. exclusive use) FXSYQ-M 	Concealed floor standing type FXNQ-MA

2.2 Outdoor Units

GYEQ20AN	GYEQ30AN

2.3 BS Units

BSGQ-P

2.4 Air Treatment Equipment

Heat Reclaim Ventilator (VAM series)

VAM-GJ

3. Capacity Range

3.1 Combination Ratio

$$\text{Combination ratio} = \frac{\text{Total capacity index of the indoor units}}{\text{Capacity index of the outdoor units}}$$

Type	Min. combination ratio	Max. combination ratio
		Types of connected indoor units
		Indoor units
Single outdoor units	50%	130%

3.2 Indoor Unit Connection Capacity

Model name	kW	Class	Capacity index	Total capacity index of connectable indoor units			Maximum number of connectable indoor units
				Combination (%)			
				50%	100%	130%	
GYEQ20AN	56.0	20	500	250	500	650	32
GYEQ30AN	85.0	30	750	375	750	975	48

3.3 Heat Recovery Operation

Model	BSGQ100PV1	BSGQ160PV1	BSGQ250PV1
Total capacity index of connectable indoor units	20 to 100	More than 100 but 160 or less	More than 160 but 250 or less
No. of connectable indoor units	Max. 5	Max. 8	Max. 8

Simultaneous heating and cooling operation within refrigerant system

In mainly cooling, partly heating mode, the system recycles heat exhausted from the cooling operation to use for heating. In mainly heating, partly cooling mode, the system uses cooled post-heating operation refrigerant for cooling. Efficiency improves when simultaneous operation is performed.

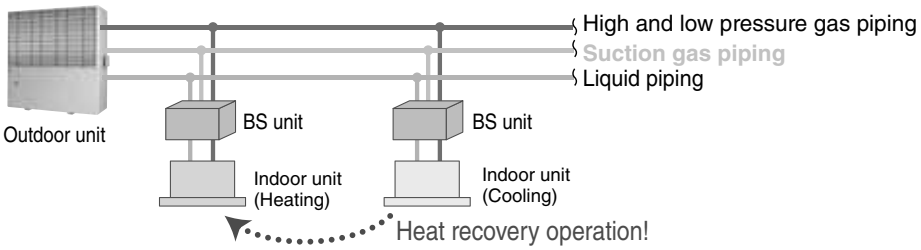

BS unit

By adding suction gas piping and a BS unit (sold separately), simultaneous heating and cooling operation can be provided by a single system.

Part 2
Device Overview

1. Model Naming 8
2. Unit Specifications 9
3. External Diagrams 10
4. Structural Diagrams 12
5. System Diagrams 14
   5.1 Refrigerant System Diagrams 14
   5.2 Cooling Water, Intake Air, Fuel and Engine Oil System Diagram 23
6. Sensor Mounting Positions 25
   6.1 Sensors Installed on the Engine 25
   6.2 Sensors Installed in the System 26
7. Electrical Wiring Diagrams 27
8. Installation Work Manual 28
9. Wiring Manual 57
10. Test Run Manual 67

1. Model Naming

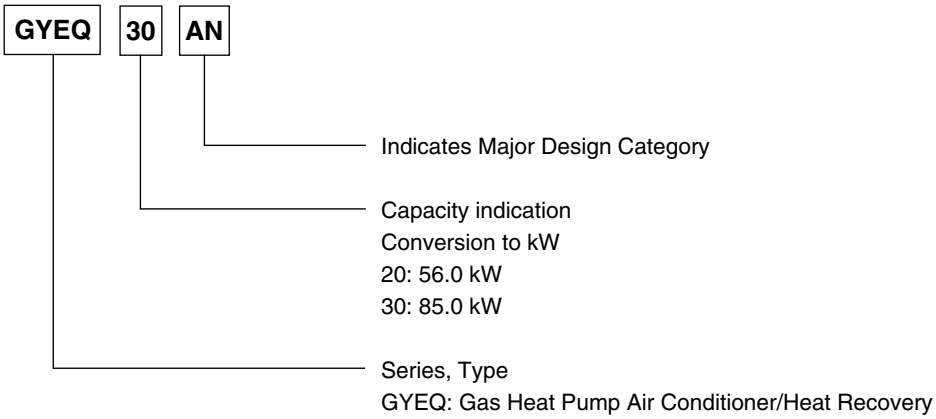

2. Unit Specifications

Model Name				GYEQ20AN	GYEQ30AN
Power Supply				1 phase, 200 V, 50 Hz	1 phase, 200 V, 50 Hz
Gas	Type			Natural gas	Natural gas
★1 Cooling Capacity			kW	56.0	85.0
★2 Heating Capacity			kW	63.0	95.0
Casing Colour				Ivory white (5Y7.5/1)	Ivory white (5Y7.5/1)
Dimensions: H × W × D			mm	2,170 × 1,690 × 800	2,170 × 2,100 × 800
Power Consumption	Cooling		kW	1.17	1.77
	Heating		kW	1.10	1.57
Fuel Gas Consumption	Cooling		kW	47.4	67.7
	Heating		kW	46.6	66.3
Compressor	Type			Scroll × 2	Scroll × 2
Fan	Type			Propeller fan	Propeller fan
	Number of Units			2	3
	Motor Output		W	370 × 2	370 × 3
	Airflow Rate		m^3/min	380	570
	Drive			Direct drive	Direct drive
Piping	Refrigerant	Liquid	mm	15.9	19.1
		Suction	mm	28.6	31.8
		Discharge	mm	22.2	28.6
	Fuel Gas Pipe		inch	R3/4	R3/4
	Exhaust Vent Outside Dia.		mm	60.5	60.5
	Drain Pipe for Exhaust Inside Dia.		mm	15	15
Weight			kg	890	1,070
Refrigerant	Type			R-410A	R-410A
	Charge		kg	11.8	11.8
Engine Lubricant	Type			Yanmar genuine GHP oil	Yanmar genuine GHP oil
Engine Coolant	Type			Yanmar genuine LLC (for GHP)	Yanmar genuine LLC (for GHP)
	Freezing Temperature		°C	–35	–35
Sound Pressure Level	Normal Mode		dB(A)	58	62
	Quiet Mode		dB(A)	55	59
Piping Length; Equivalent/Actual			m	200/170	200/170
Height Difference between Indoor and Outdoor Units	O/U is above		m	50	50
	O/U is below		m	50	50
Height Difference between Indoor Units			m	15	15
Connectable Indoor Units	Number			32	48
	Capacity		%	50 - 130	50 - 130
Drawing No.				3PA003939A	3PA003939A

Notes:

★1 Indoor temp.: 27°CDB, 19°CWB / outdoor temp.: 35°CDB / Equivalent piping length: 7.5 m, level difference: 0 m.
★2 Indoor temp.: 20°CDB / outdoor temp.: 7°CDB, 6°CWB / Equivalent piping length: 7.5 m, level difference: 0 m.

Conversion Formulae
kcal/h = kW × 860 Btu/h = kW × 3412 cfm = m^3/min × 35.3

3. External Diagrams

GYEQ20AN

Unit (mm)

3PA003981A

No.	Description	Remarks
1	Refrigerant liquid piping connector	Ø15.9
2	Refrigerant gas piping connector	Ø28.6
3	Refrigerant discharge gas piping connector	Ø22.2
4	Exhaust drain piping connector	Ø15 (inside dia.)
5	Fuel gas piping connector	R3/4 [PT3/4 (external thread)]
6	Electrical wiring port	Ø28 / Ø36 Grommet
7	Air inlet	
8	Hour meter	
9	Cooling water tank level	
10	Cooling water fill port cover A	
11	Exhaust vent	Ø60.5 (outside dia.)
12	Drain condensate piping connector	Ø15 (inside dia.)
13	Cooling water fill port cover B	
14	Electrical wiring port for options	Ø17 / Ø26

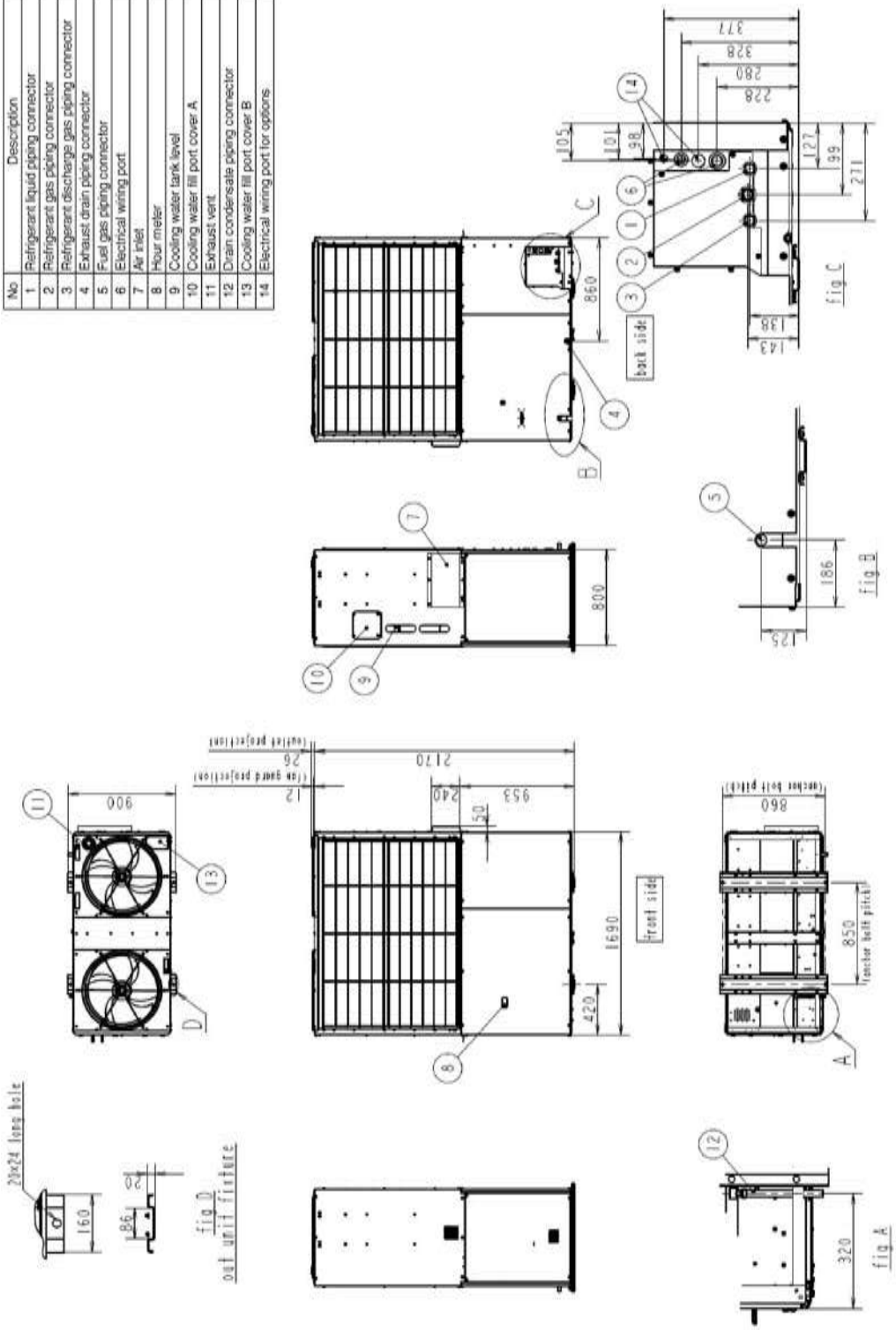

GYEQ30AN

Unit (mm)

3PA003980A

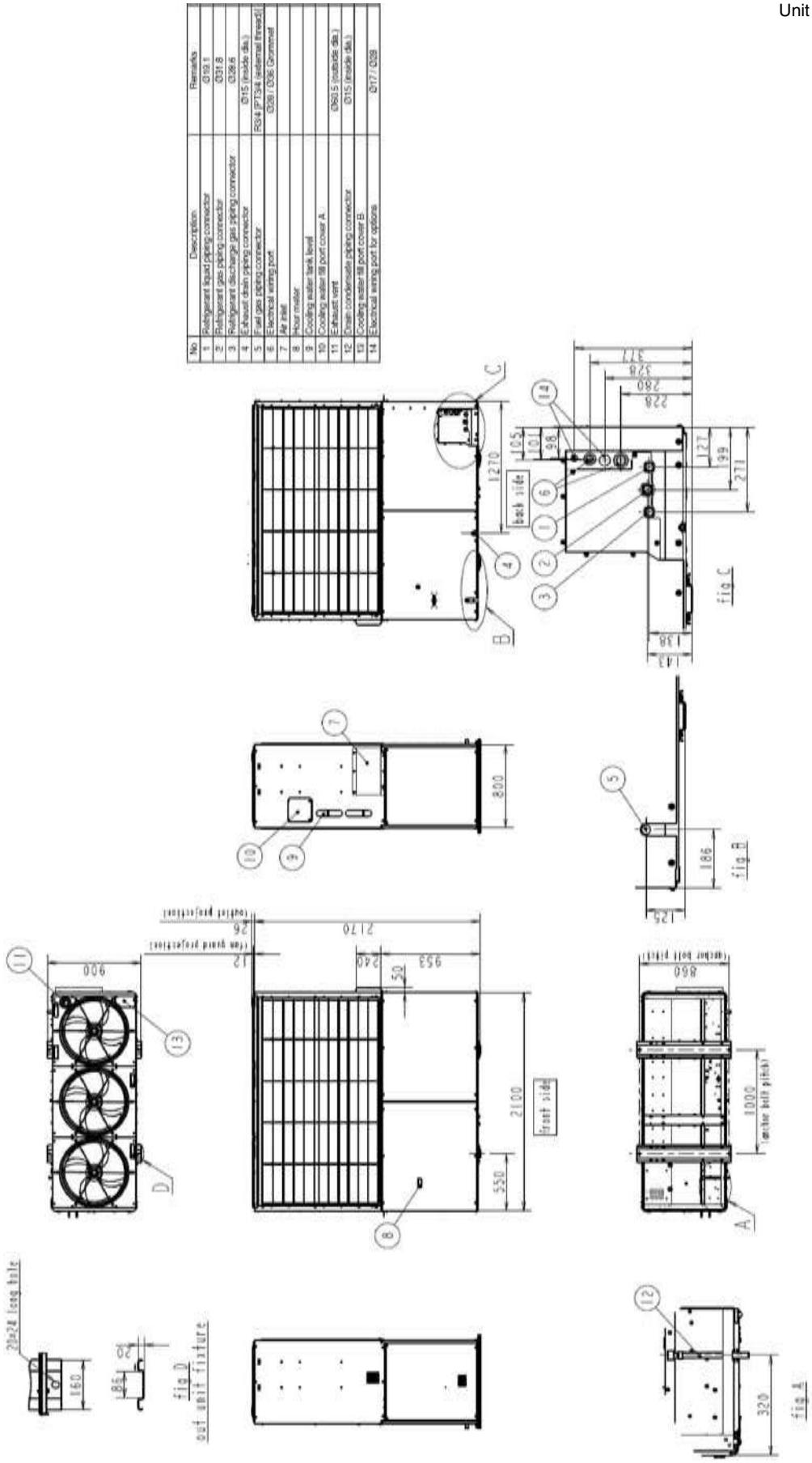

No	Description	Remarks
1	Refrigerant liquid piping connector	Ø19.1
2	Refrigerant gas piping connector	Ø31.8
3	Refrigerant discharge gas piping connector	Ø28.6
4	Exhaust drain piping connector	Ø15 (inside dia.)
5	Fuel gas piping connector	RC¼ (PT¾ (external thread))
6	Electrical wiring port	Ø28 / Ø36 Grommet
7	Air inlet	
8	Hour meter	
9	Cooling water tank level	
10	Cooling water fill port cover A	
11	Exhaust vent	Ø63.5 (outside dia.)
12	Drain condensate piping connector	Ø15 (inside dia.)
13	Cooling water fill port cover B	
14	Electrical wiring port for options	Ø17 / Ø28

4. Structural Diagrams

GYEQ20AN

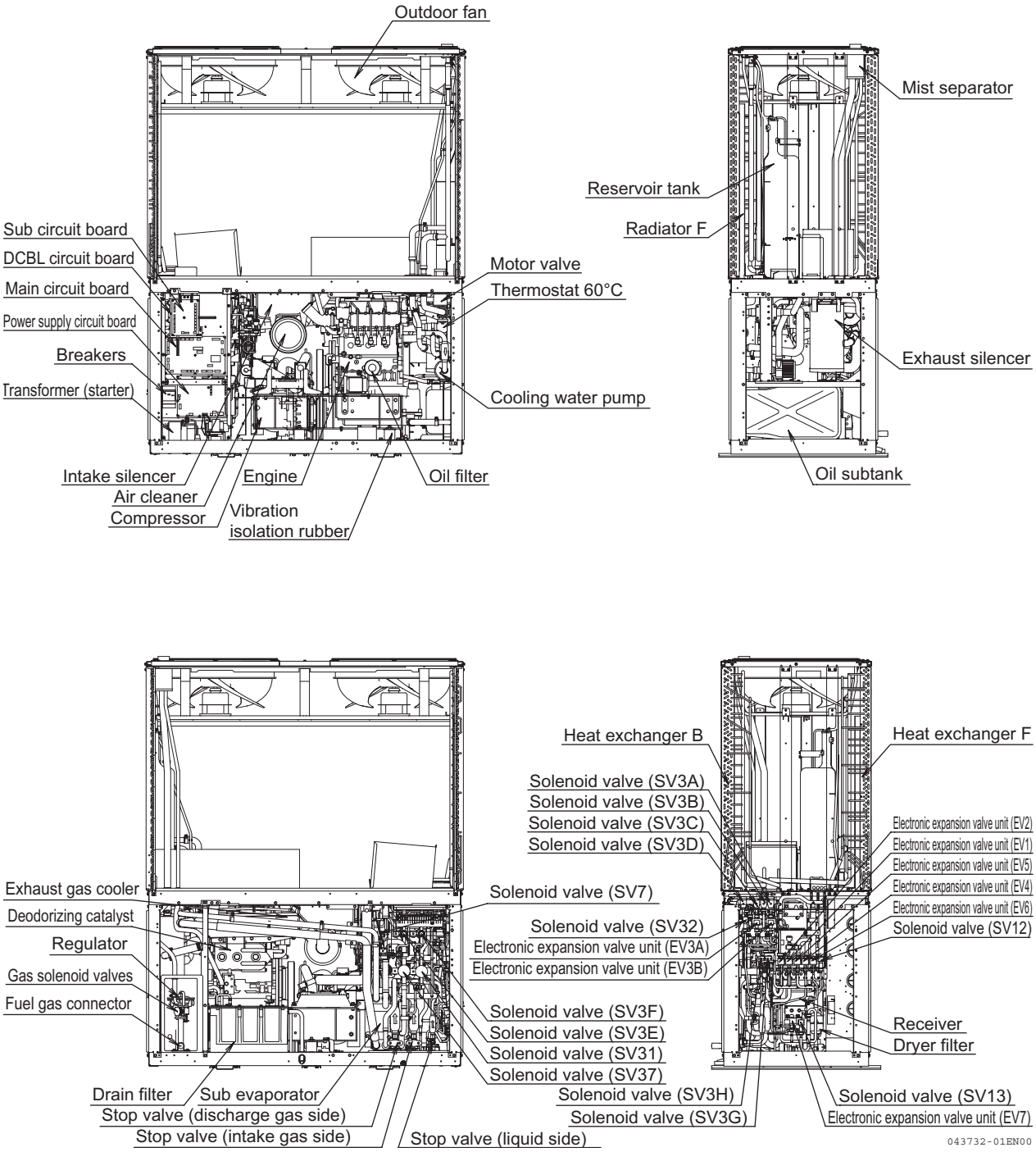

GYEQ30AN

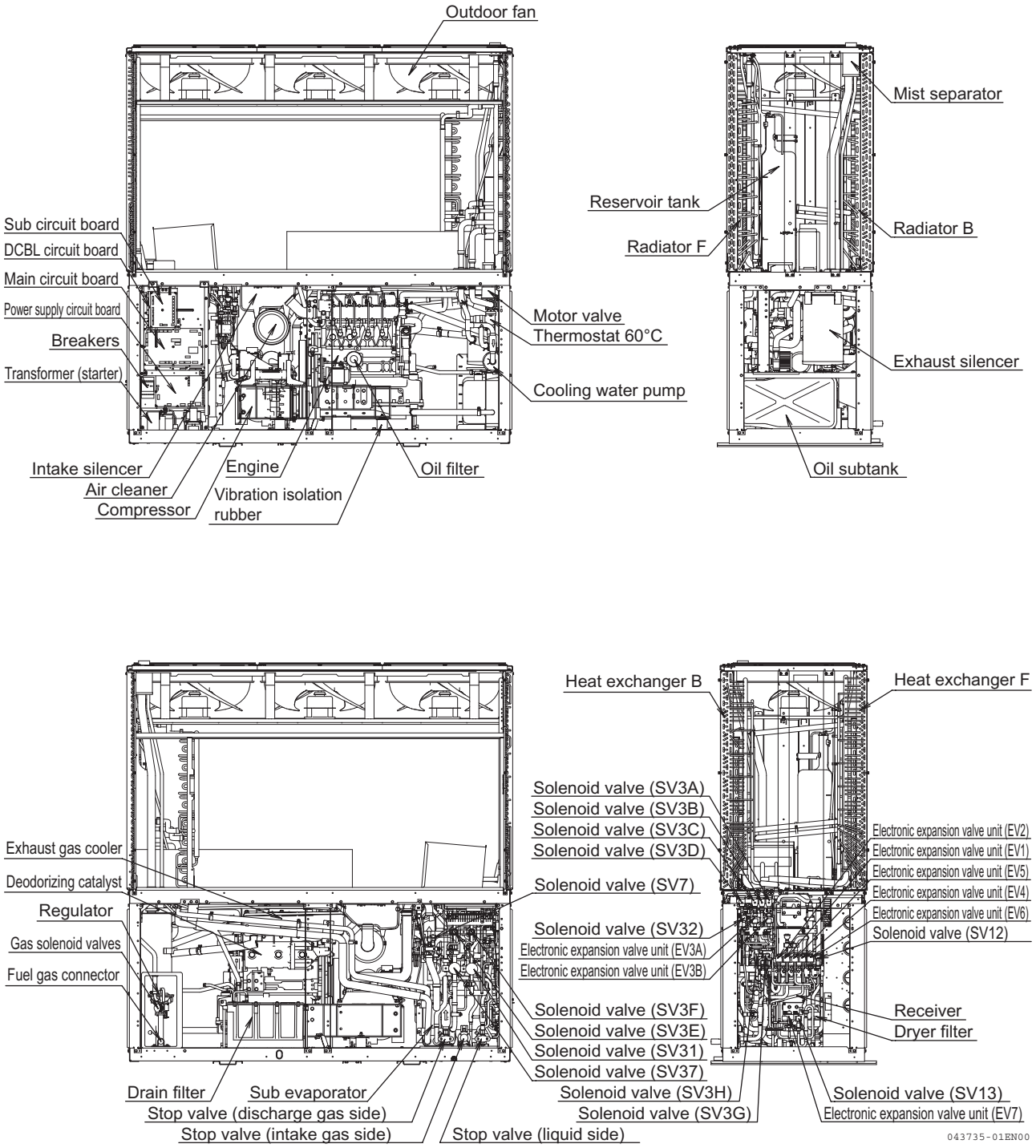
Outdoor fan
Mist separator
Reservoir tank
Radiator B
Radiator F
Sub circuit board
DCBL circuit board
Main circuit board
Power supply circuit board
Breakers
Transformer (starter)
Motor valve
Thermostat 60°C
Exhaust silencer
Cooling water pump
Intake silencer
Engine
Oil filter
Oil subtank
Air cleaner
Compressor
Vibration isolation rubber
Heat exchanger B
Heat exchanger F
Solenoid valve (SV3A)
Solenoid valve (SV3B)
Solenoid valve (SV3C)
Solenoid valve (SV3D)
Electronic expansion valve unit (EV2)
Electronic expansion valve unit (EV1)
Electronic expansion valve unit (EV5)
Electronic expansion valve unit (EV4)
Electronic expansion valve unit (EV6)
Solenoid valve (SV12)
Exhaust gas cooler
Deodorizing catalyst
Regulator
Gas solenoid valves
Fuel gas connector
Solenoid valve (SV7)
Solenoid valve (SV32)
Electronic expansion valve unit (EV3A)
Electronic expansion valve unit (EV3B)
Solenoid valve (SV3F)
Solenoid valve (SV3E)
Solenoid valve (SV31)
Solenoid valve (SV37)
Receiver
Dryer filter
Drain filter
Sub evaporator
Stop valve (discharge gas side)
Stop valve (intake gas side)
Stop valve (liquid side)
Solenoid valve (SV3H)
Solenoid valve (SV3G)
Solenoid valve (SV13)
Electronic expansion valve unit (EV7)
043735-01EN00

5. System Diagrams

5.1 Refrigerant System Diagrams

5.1.1 Cooling Mode Operation

- High-temperature, high-pressure refrigerant gas compressed by the compressor is fed via the solenoid valve to the outdoor heat exchanger, which in turn condenses the refrigerant gas while radiating the condensation heat into the outdoor air; this is where the refrigerant changes from gas to liquid.
- The indoor electronic expansion valve depressurizes the liquid refrigerant to facilitate refrigerant evaporation in the evaporator.
- It is the indoor heat exchanger that functions as the evaporator, which deprives the indoor air of evaporation heat by changing the refrigerant from liquid to gas. The indoor air is cooled through this evaporation heat deprivation process.
- Finally, gasified refrigerant enters into the outdoor unit and returns via the solenoid valve to the compressor, completing one cooling cycle.

GYEQ20AN

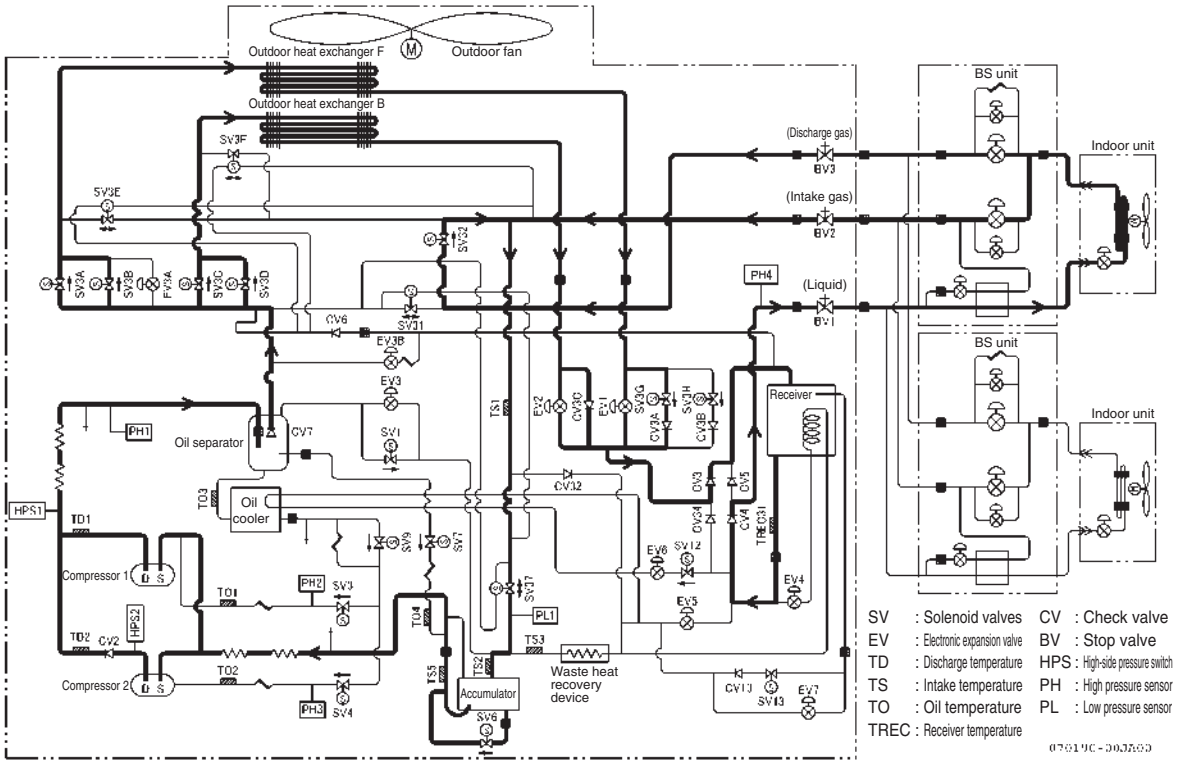

∗ The actuators and refrigerant flow may vary depending on the control.

GYEQ30AN

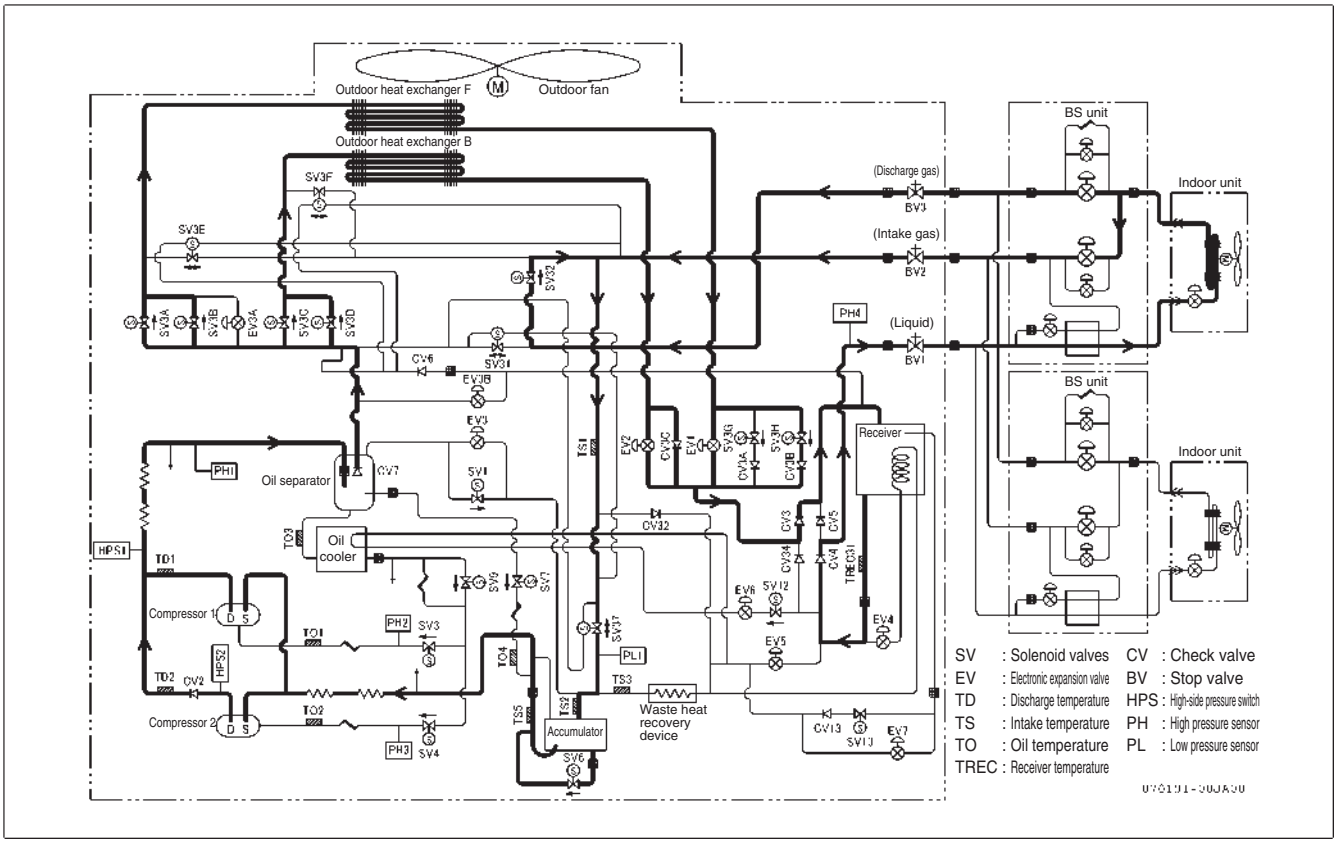

∗ The actuators and refrigerant flow may vary depending on the control.

5.1.2 Cooling Main / Heating Main A Mode Operation

- High-temperature, high-pressure refrigerant gas compressed by the compressor is fed to outdoor heat exchanger F and the indoor heat exchanger on the heating side, which in turn condense the refrigerant gas while radiating the condensation heat into the air. The indoor unit on the heating side warms the indoor air through this heat radiation. This is where the refrigerant changes from gas to liquid.
- The indoor electronic expansion valve on the cooling side depressurizes the liquid refrigerant to facilitate refrigerant evaporation in the evaporator.
- It is the indoor heat exchanger on the cooling side that functions as the evaporator, which deprives the indoor air of evaporation heat by changing the refrigerant from liquid to gas. The indoor air is cooled through this evaporation heat deprivation process.
- The refrigerant that has passed through the indoor heat exchanger on the cooling side is fed to the outdoor unit, which in turn completely evaporates the refrigerant by mixing it with high-temperature, high-pressure refrigerant in the waste heat recovery device and then returns it to the compressor. This completes one cooling/heating cycle.

GYEQ20AN

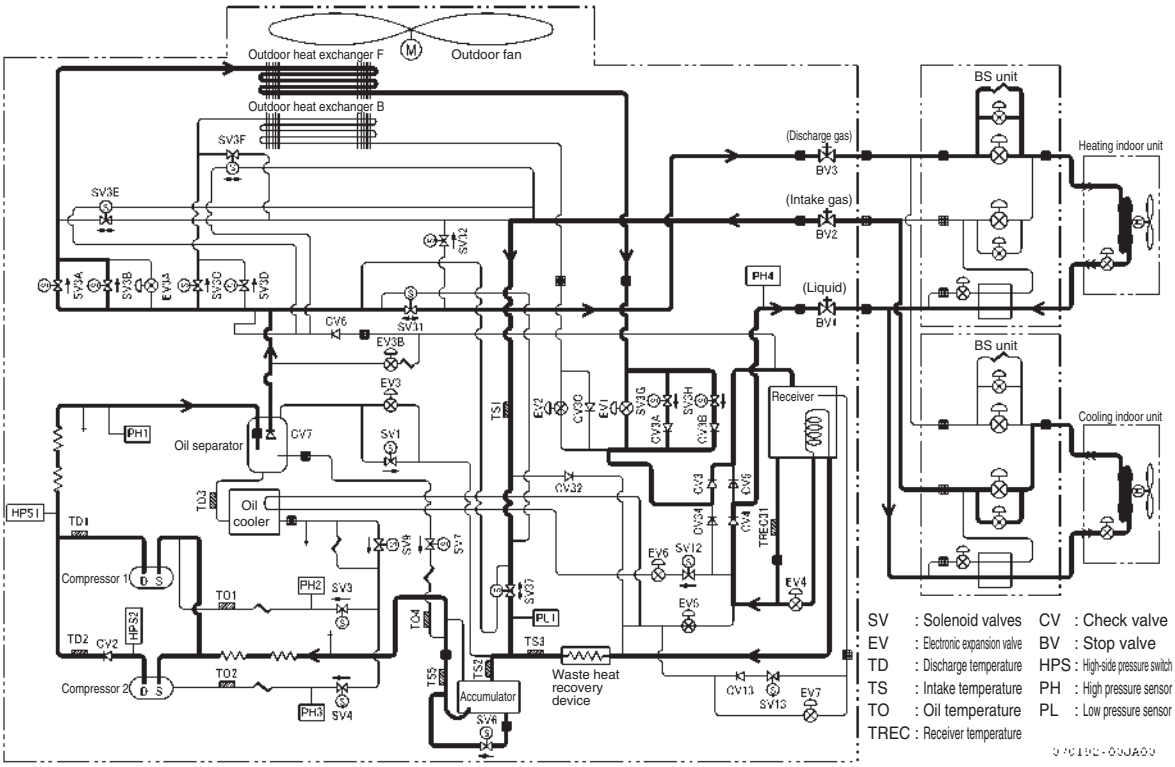

∗ The actuators and refrigerant flow may vary depending on the control.

GYEQ30AN

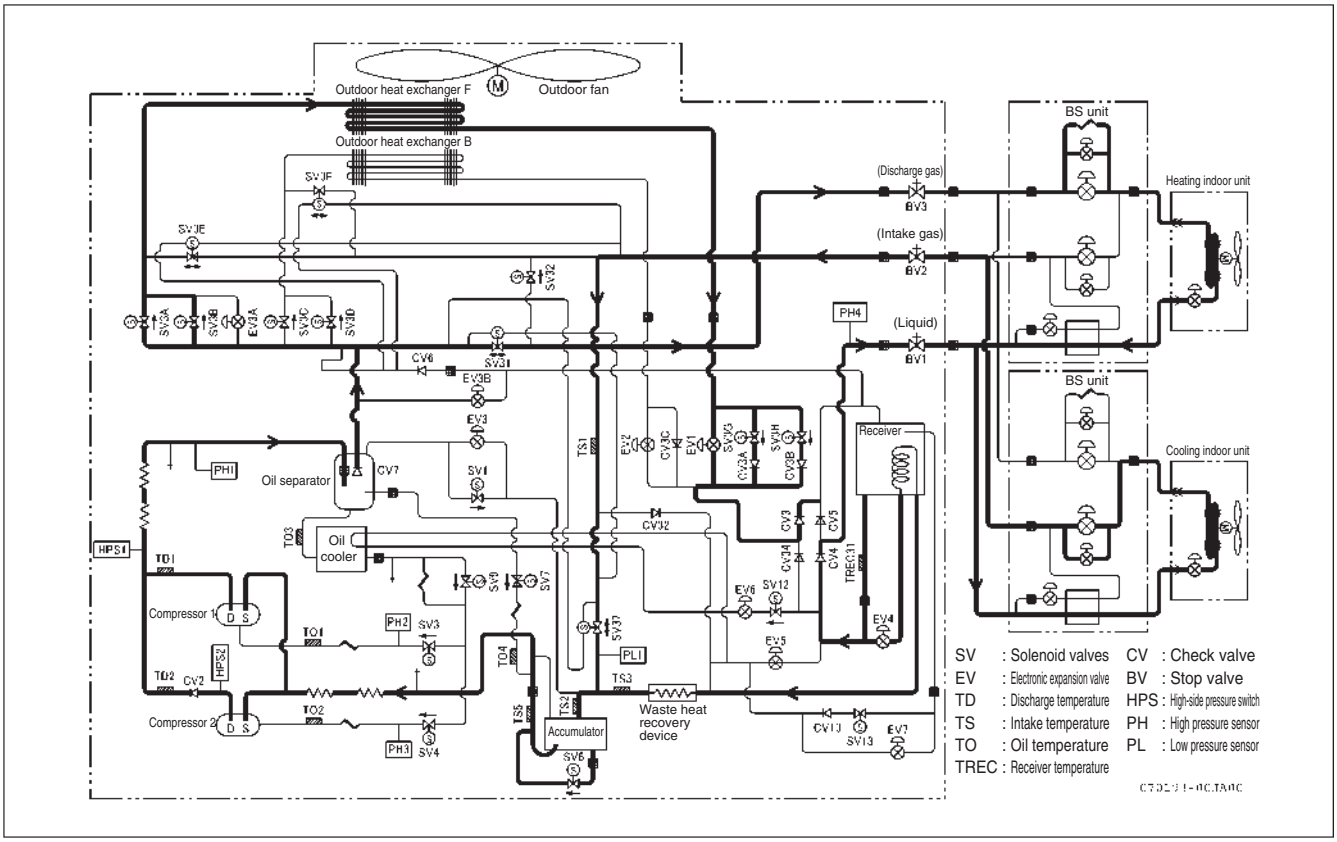

∗ The actuators and refrigerant flow may vary depending on the control.

5.1.3 Heating Main B / Heating Mode Operation

- High-temperature, high-pressure refrigerant gas compressed by the compressor is fed to the indoor heat exchanger on the heating side, which in turn condenses the refrigerant gas and heats the indoor air by radiating the condensation heat; this is where the refrigerant changes from gas to liquid.
- The outdoor electronic expansion valve (and indoor electronic expansion valve on the cooling side) depressurize the liquid refrigerant to facilitate refrigerant evaporation in outdoor heat exchanger F/B (and the indoor heat exchanger on the cooling side) and the waste heat recovery device.
- It is outdoor heat exchanger F/B (and the indoor heat exchanger on the cooling side) that function as the evaporator, which deprives the air of evaporation heat by changing the refrigerant from liquid to gas. (The indoor unit on the cooling side cools the indoor air through this evaporation heat deprivation process.) Also, the refrigerant that has passed through the waste heat recovery device completely evaporates and deprives the gas engine cooling water (hot water) of heat.
- The refrigerant that has passed through outdoor heat exchanger F/B (and the indoor heat exchanger on the cooling side) is fed to the waste heat recovery device, which in turn completely evaporates the refrigerant by mixing it with high-temperature, high-pressure refrigerant and then returns it to the compressor. This completes one cooling/heating cycle.

∗ The operations in parenthesis ( ) are not performed in the heating mode.

GYEQ20AN

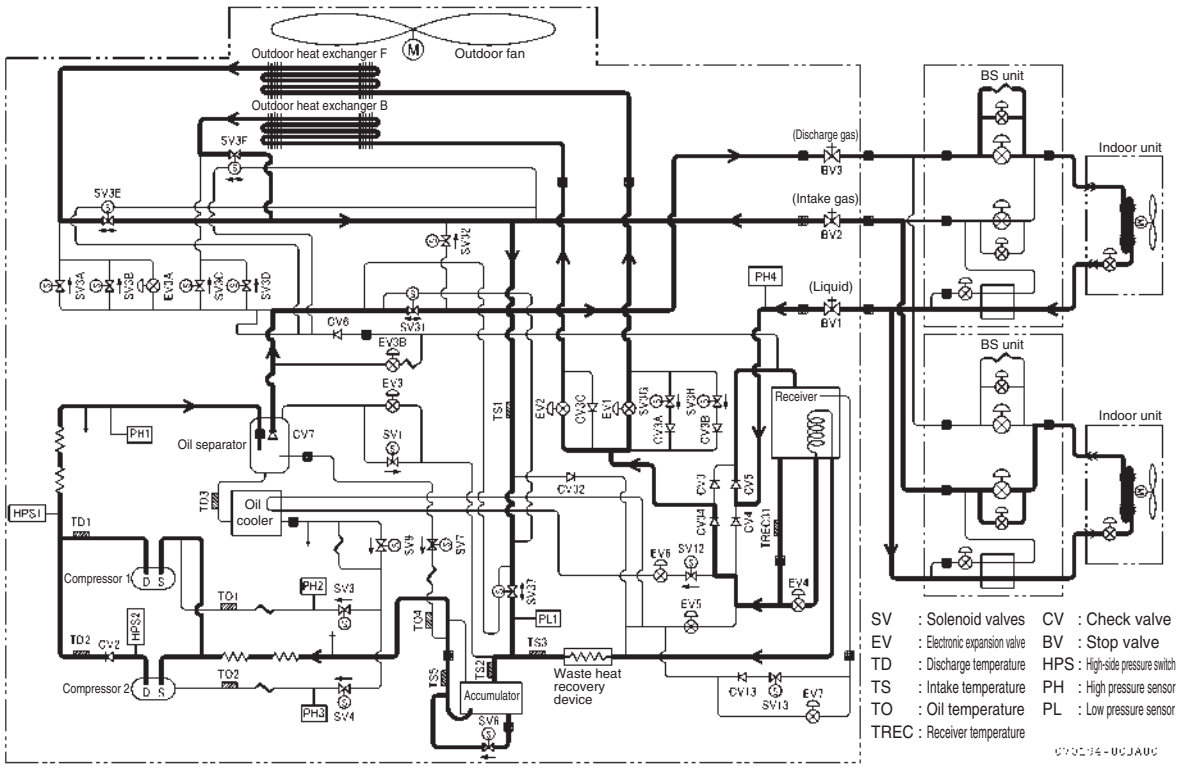

∗ The actuators and refrigerant flow may vary depending on the control.

GYEQ30AN

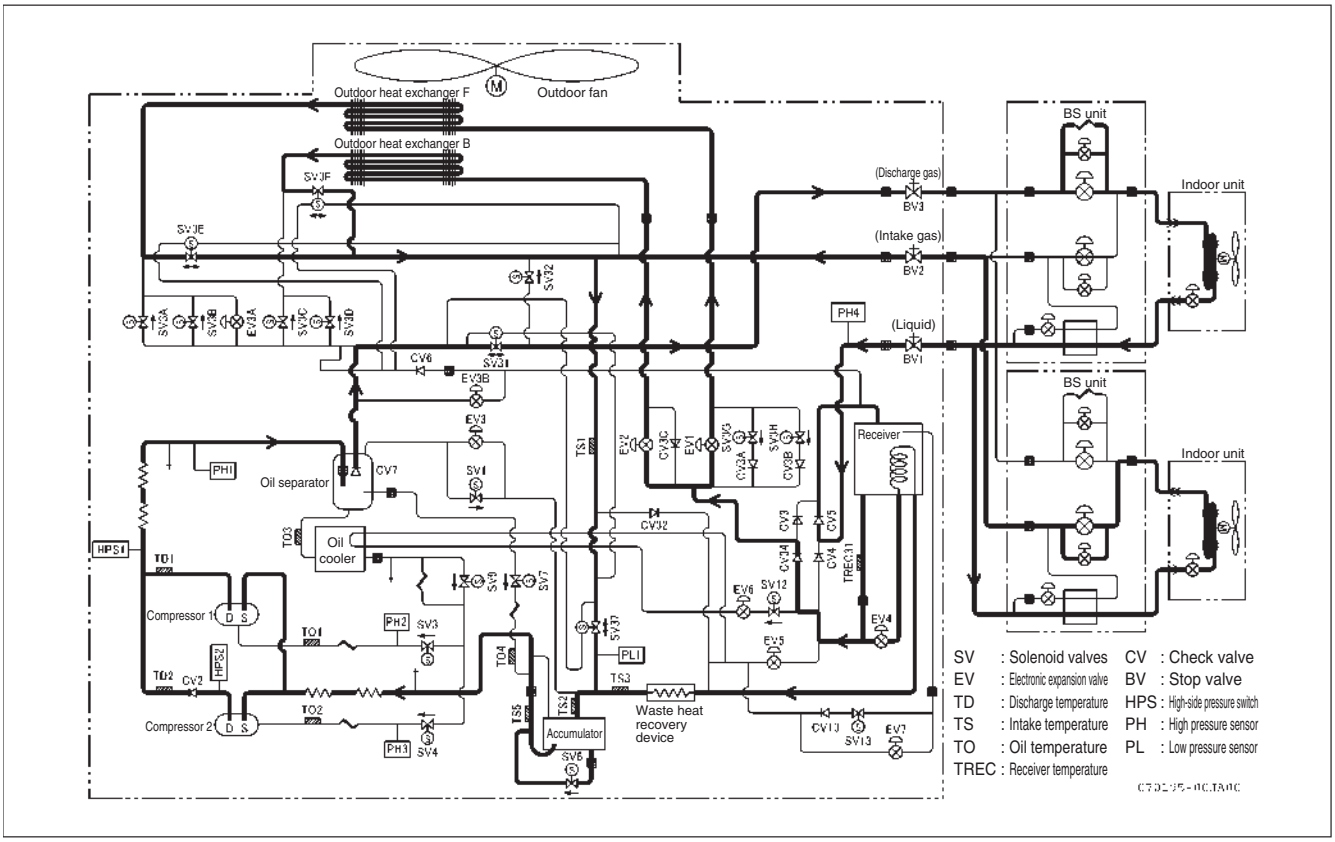

∗ The actuators and refrigerant flow may vary depending on the control.

5.1.4 Heating operation

- High-temperature, high-pressure refrigerant gas compressed by the compressor is fed to the indoor heat exchanger, which in turn condenses the refrigerant gas and heats the indoor air by radiating the condensation heat; this is where the refrigerant changes from gas to liquid.
- The outdoor electronic expansion valve depressurize the liquid refrigerant to facilitate refrigerant evaporation in outdoor heat exchanger F/B and the waste heat recovery device.
- It is outdoor heat exchanger F/B that function as the evaporator, which deprives the air of evaporation heat by changing the refrigerant from liquid to gas.
  Also, the refrigerant that has passed through the waste heat recovery device completely evaporates and deprives the gas engine cooling water of heat.
- The refrigerant that has passed through outdoor heat exchanger F/B is fed to the waste heat recovery device, which in turn completely evaporates the refrigerant by mixing it with high-temperature, high-pressure refrigerant and then returns it to the compressor. This completes one heating cycle.

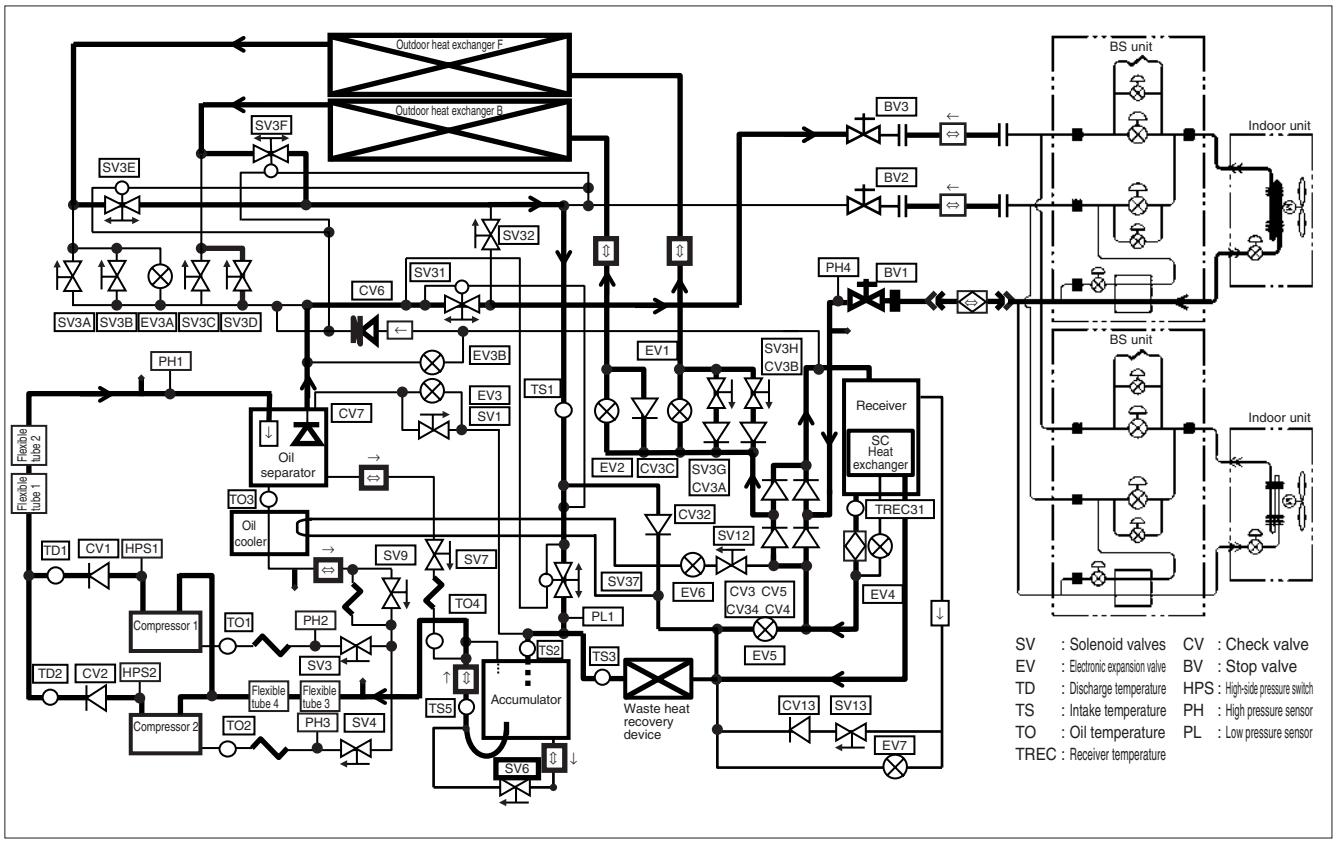

5.1.5 Defrosting Operation

- High-temperature, high-pressure gas compressed by the compressor is fed via the solenoid valve to the outdoor heat exchanger, which in turn condenses the gas while radiating the condensation heat into the outdoor air. This condensation heat is used to melt frost formed on the outdoor heat exchanger.
- The partially liquefied refrigerant that has passed through the outdoor heat exchanger is fed via the receiver to the waste heat recovery device, where it completely evaporates and deprives the gas engine cooling water (hot water) of heat before returning to the compressor. The engine's waste heat is used as the heat source for heating operation.

GYEQ20AN

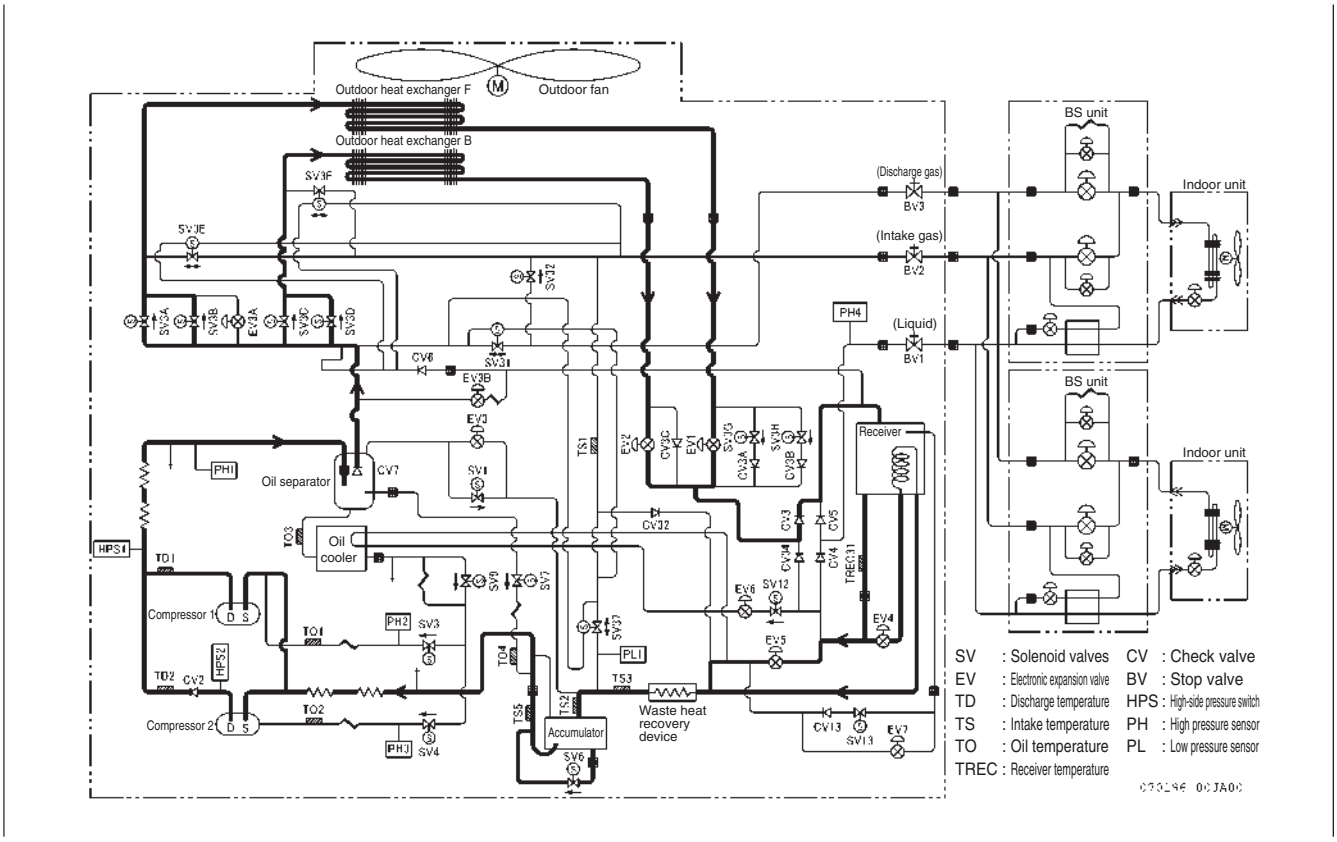

GYEQ30AN

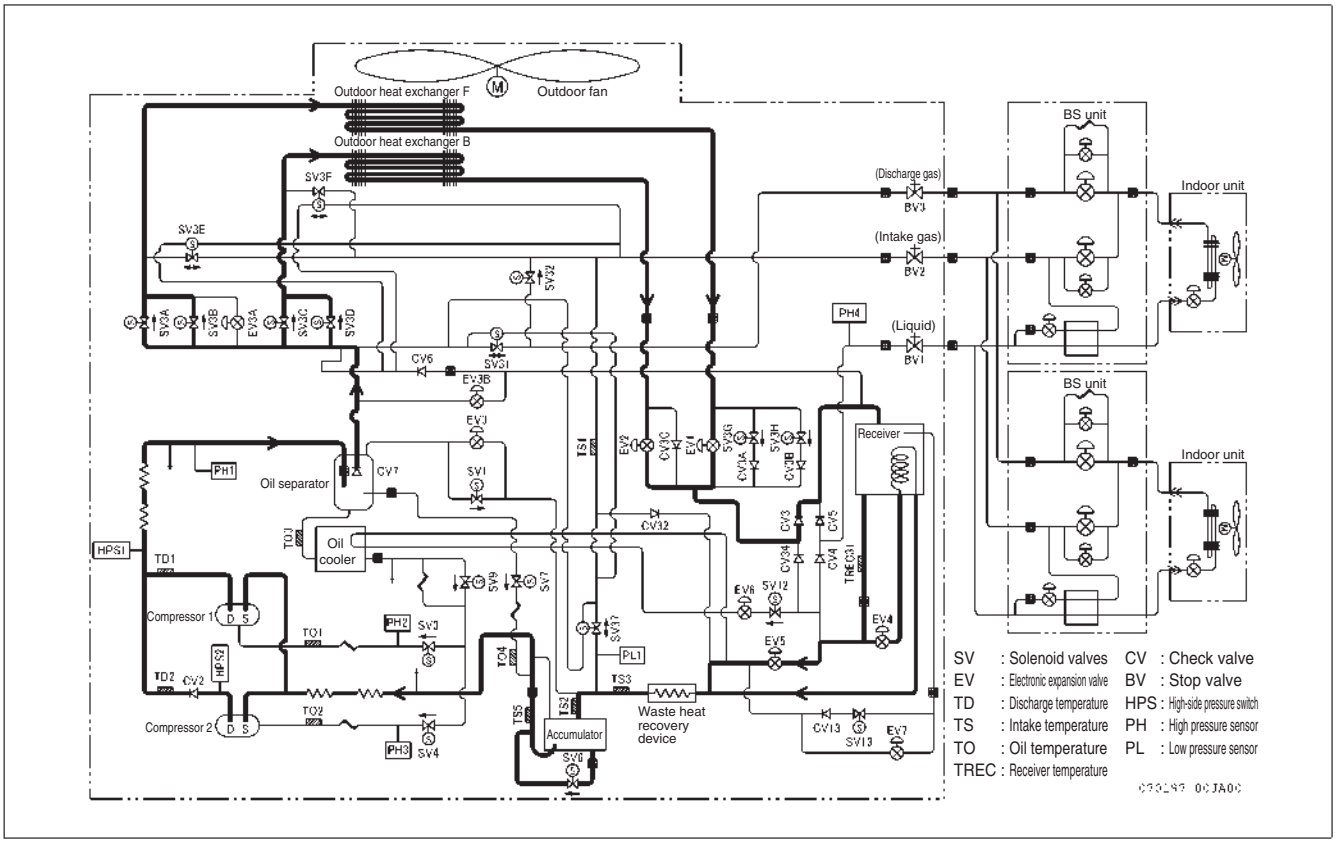
Outdoor heat exchanger F
Outdoor fan
Outdoor heat exchanger B
SV3F
SV3E
SV3A
SV3B
EV3A
SV3C
SV3D
SV32
CV6
SV31
EV3B
EVJ
SV1
PH1
Oil separator
CV7
TOJ
Oil cooler
HPS1
TD1
Compressor 1
D S
TO1
PH2
SV3
SV9
SV7
SV37
TO4
PL1
TS3
TD2
CV2
HPS2
TO2
Compressor 2
PH3
SV4
TS5
TS2
Accumulator
SV6
Waste heat recovery device
TS1
EV2
CV3C
EV1
SV36
SV3H
CV34
CV3B
CV32
CV3
CV5
CV34
CV4
TREC31
EV6
SV12
EV5
EV4
CV13
SV13
EV7
Receiver
PH4
(Discharge gas)
BV3
(Intake gas)
BV2
(Liquid)
BV1
BS unit
Indoor unit
BS unit
Indoor unit
SV : Solenoid valves
EV : Electronic expansion valve
TD : Discharge temperature
TS : Intake temperature
TO : Oil temperature
TREC : Receiver temperature
CV : Check valve
BV : Stop valve
HPS : High-side pressure switch
PH : High pressure sensor
PL : Low pressure sensor

5.2 Cooling Water, Intake Air, Fuel and Engine Oil System Diagram

Cooling water system diagrams

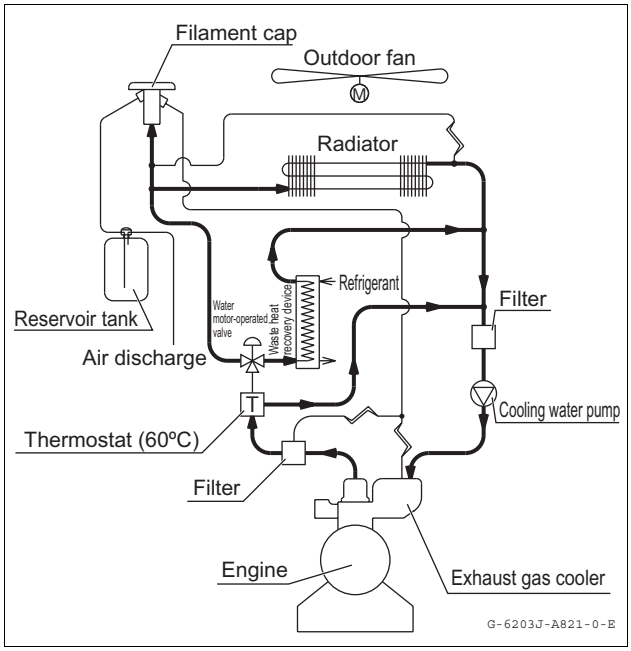

Intake air system diagram

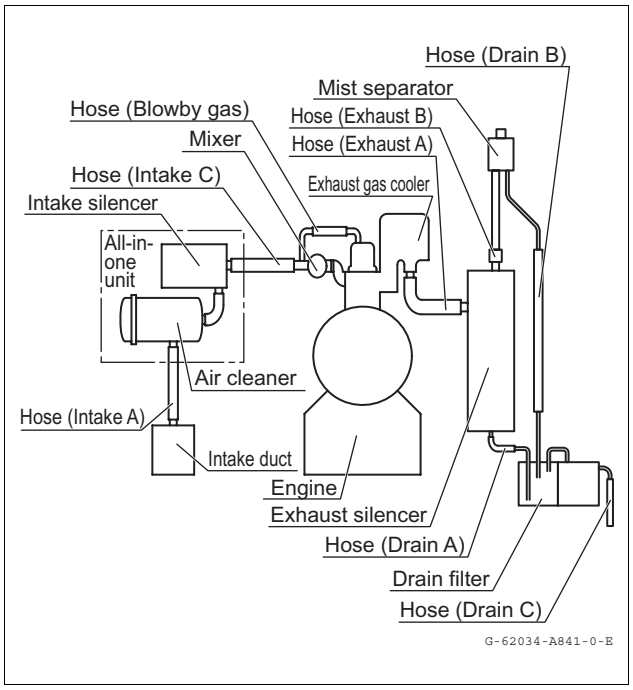

Fuel system diagram

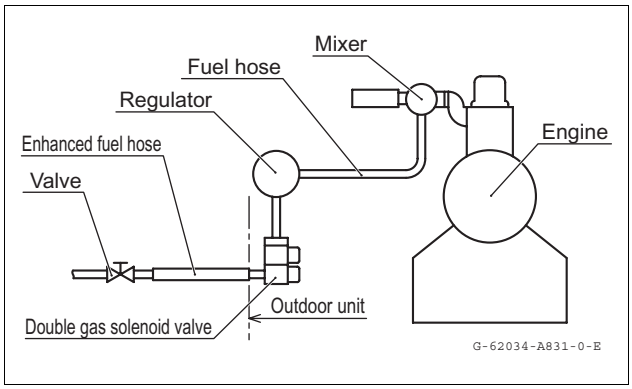

Engine oil supply system diagram

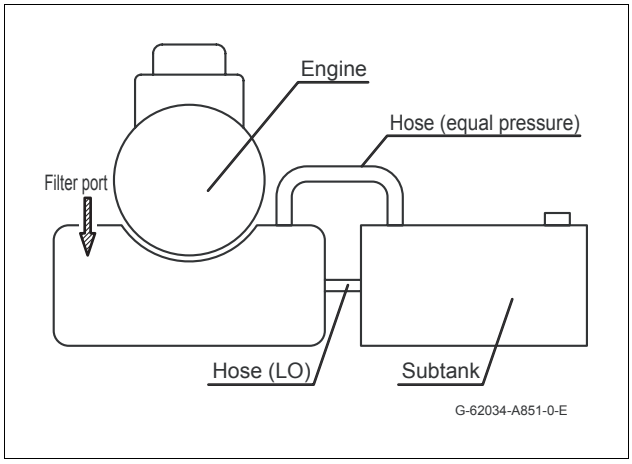

6. Sensor Mounting Positions

6.1 Sensors Installed on the Engine

Engine sensor mounting positions 3GPH88 (GYEQ20AN)

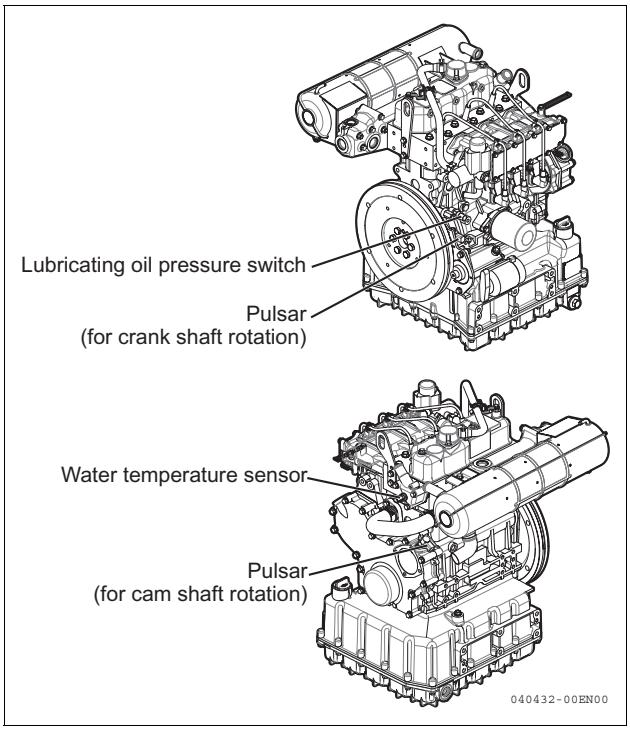

Engine sensor mounting positions 4GPH88 (GYEQ30AN)

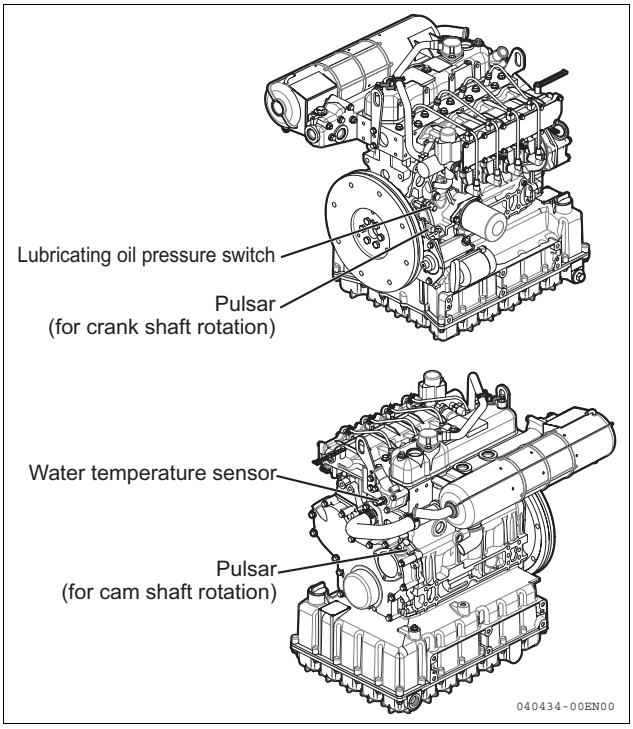

6.2 Sensors Installed in the System

System sensor mounting positions

GYEQ20AN

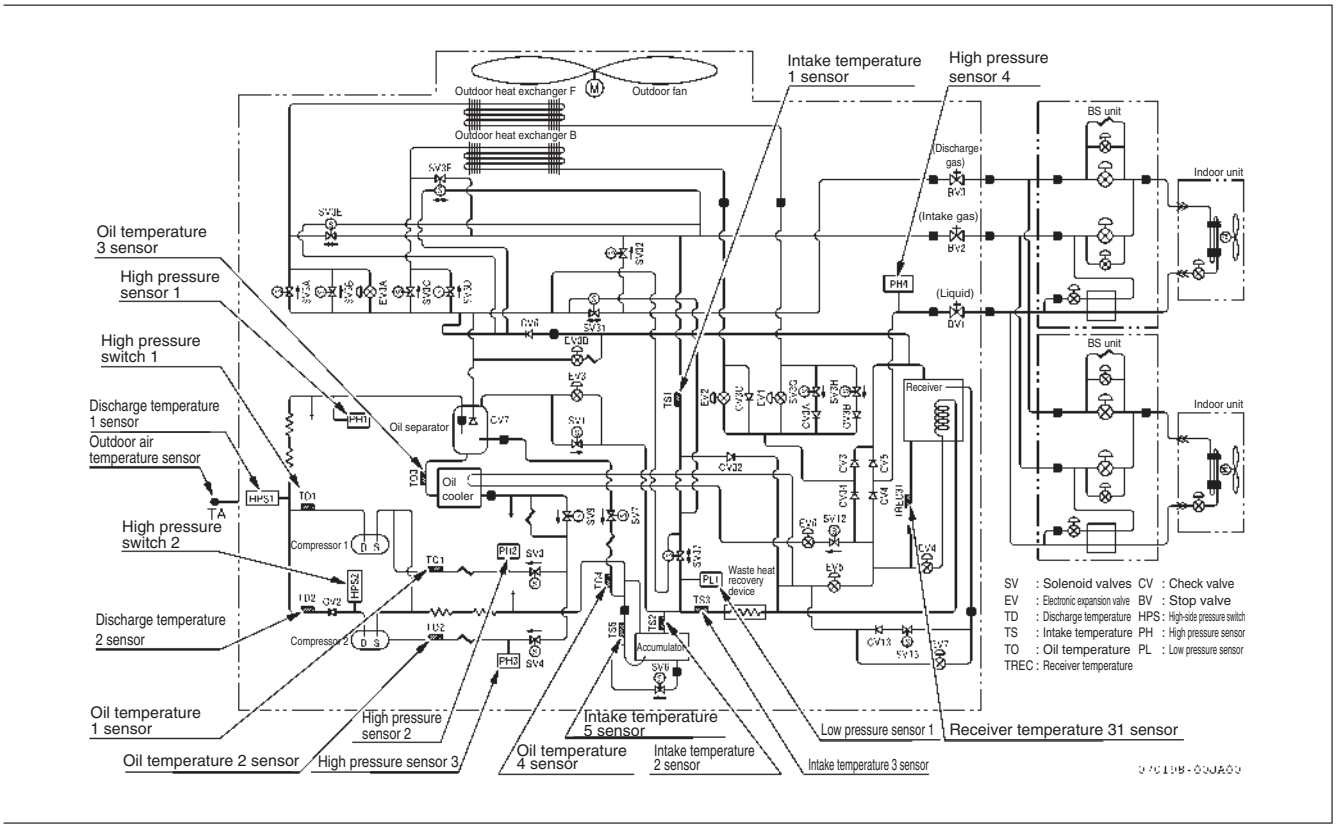

GYEQ30AN

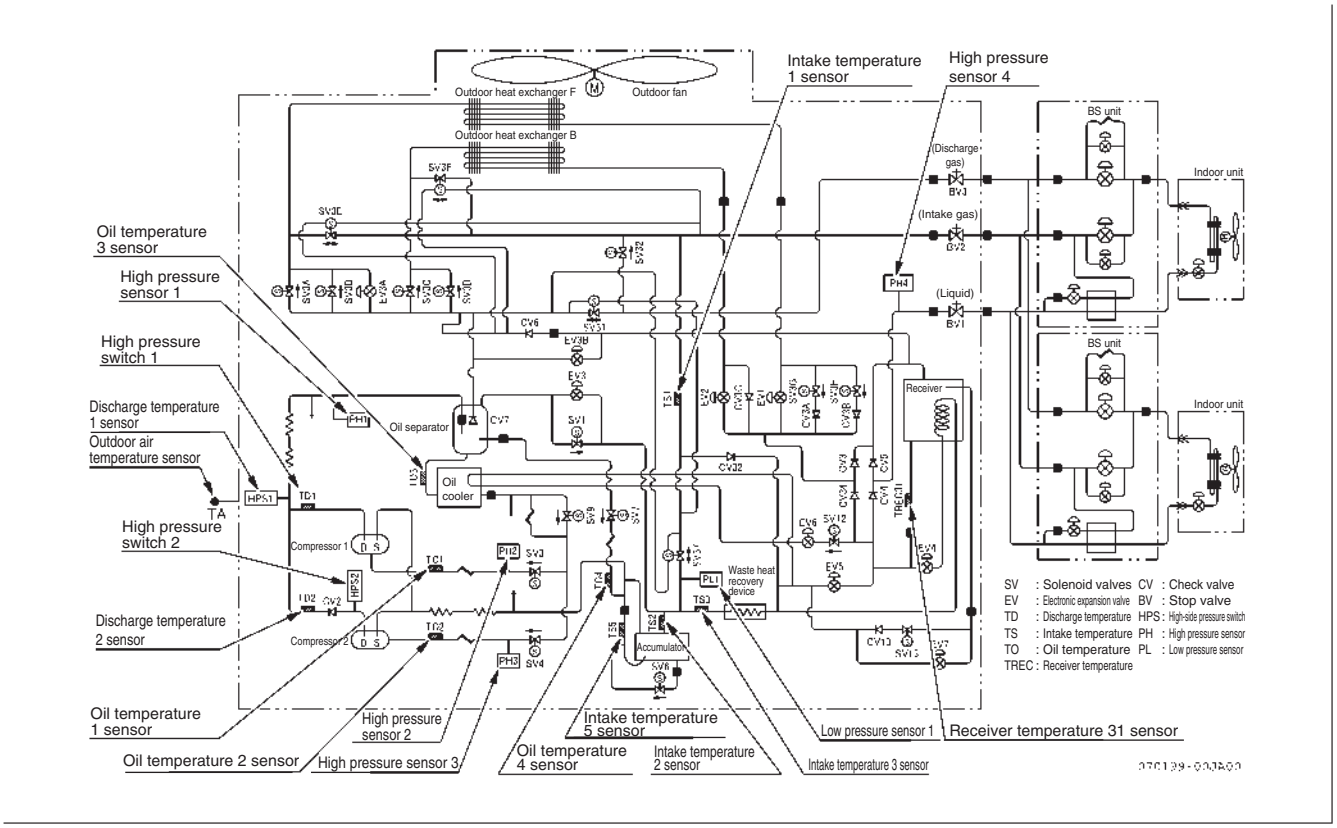

7. Electrical Wiring Diagrams

GYEQ20AN / GYEQ30AN

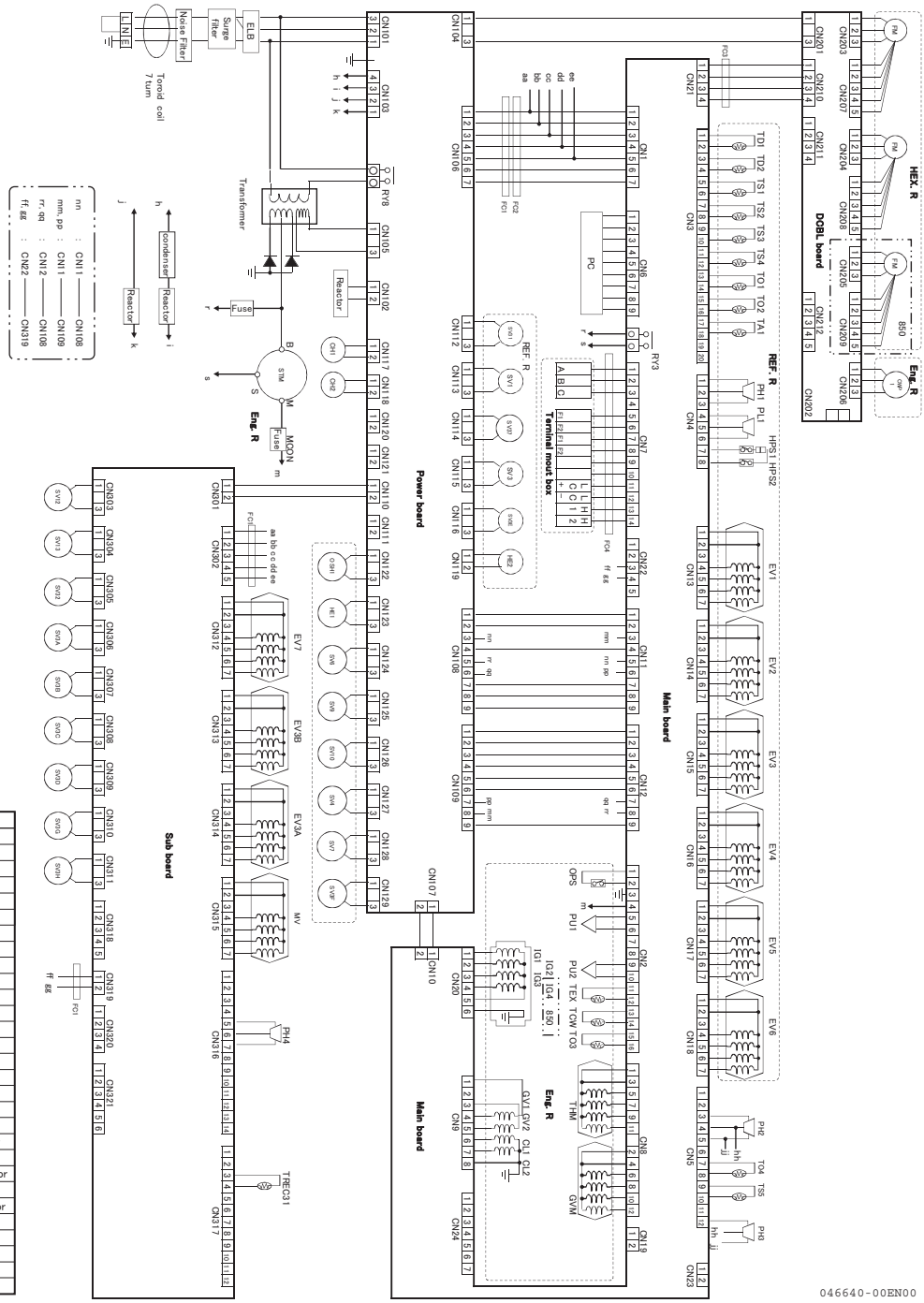

Mark	Component Name
CL	Compressor clutch
CH	Compressor heater
OSH	Oil separator heater
SV	Solenoid valve
EV	Electonic expansion valve
STM	Starter motor
GV	Fuel gas solenoid valve
THM	Mixer (THM)
GVM	Mixer (GVM)
IG	Ignition coil
BH	Block heater
DH	Drain filter heater
FM	Outdoor fan motor
CWP	Cooling water pump
PH	High pressure sensor
PL	Low pressure sensor
HPS	High pressure switch
OPS	Oil pressure switch
PU	Rotation sensor
TD	Discharge temp. sensor
TS	Intake temp. thermistor
TO	Refrigerant oil temp. sensor
TA	Outdoor temp. sensor
TCW	Cooling water temp. sensor
TREC	Receiver temp. sensor
HE1	Accumulator heater
HE2	Return oil heater
FC	Ferrite core
MV	Motor valve

8. Installation Work Manual

Table of Contents

1 Safety Precautions 1

2 Combinations with Indoor Units 2

3 Selection of Installation Location..... 3

4 Servicing Space Requirements for the Outdoor Units ... 5

5 External Dimension Diagram/Servicing Space for External Filter ... 6

6 Installation Foundation for Outdoor Units..... 7

7 Installing the Outdoor Unit..... 9

- Bringing the outdoor unit into the room 9
- Preparing the refrigerant piping 9
- Refrigerant piping work and connection 13
- Performing piping work using the external filter..... 15
- Air tightness test and evacuation of refrigerant piping 23
- Piping work for outdoor unit exhaust drain and condensed water drain pipes 25
- Fuel gas pipe 26
- Recharging refrigerant 26
- Checklist for the completion of work 28

Please be sure to refer to the attached Electrical Work Manuals and Test Run Manuals for important additional information.
Also, refer to the Work Manuals for indoor units.

Two types of precautions are provided in this work manual: "⚠WARNING" and "⚠CAUTION". Please be sure to obey both types of precautions as they include important information for operational safety. These precautions are shown and described as follows:

⚠ **WARNING**	**Failure to follow this warning may result in serious injury or death.**
⚠ **CAUTION**	**Failure to obey this safety message or pay the necessary attention may result in injury or serious damage to the product.**

0FGHP-EN0801 DGJ002

1 Safety Precautions

⚠WARNING

- **DAIKIN Gas Heat Pump Air Conditioning units must be installed by piping work specialists, not by the user.**
- **Do not install the outdoor unit inside or partly inside a building.**
- **Confirm the product is suitable for the fuel gas type.**
- **In areas that have snowfall in winter, take measures to protect the product from snow.**
- **In areas that have strong winds, install the product so that the fan on the outdoor unit does not face the wind, or take measures in advance to protect against the wind.**

⚠CAUTION

- **Be sure to read and follow this manual before you do the installation work.**
- **Decide in advance how you will transport the product to its installation location.**
- **Avoid installing and using the product in the following locations.**
  a. Where a lot of oil is nearby.
  b. Where the salt content is high (e.g. seaside districts).
  c. Where the atmosphere is acid or alkaline (e.g. sulfurous gases in spa regions).
  d. Where voltage often fluctuates (e.g. factories).
  e. Mounted on land or sea vehicles.
  f. Close to a machine that generates electromagnetic waves.
  g. Close to an exhaust vent of a building that discharges steam or organic solvents.

⚠CAUTION

- **Radio reception may be affected by interference. Install indoor and outdoor units and lay wiring at a safe distance from TVs, radios, audio equipment and PCs. Refer to the figure on the right. (Maintain a distance of 3 m or more from radios, PCs or stereos, especially in areas with weak reception. Pass the wiring through the power supply and transmission wiring conduits, and ground each conduit independently.)**

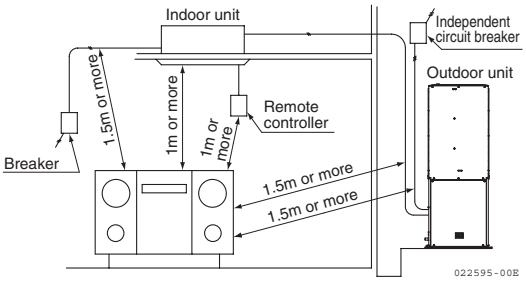

- **This unit is designed and manufactured especially for the R410A refrigerant.**
  If a different type of refrigerant other than the R410A refrigerant is used, mechanical fault, malfunction and failure may result, which could cause a serious safety hazard. Never fill any other refrigerants except the R410A refrigerant.
  The filled refrigerant type is recorded on the unit nameplate.
  DAIKIN is not responsible for any defects (including failures and malfunctions) and accidents caused by filling a refrigerant other than R410A.
- **Recording the filled refrigerant amount**
  When you refill the chlorofluorocarbon refrigerant, record the type and quantity of the chlorofluorocarbon on the sticker attached above the stop valve on the outdoor unit's terminal box cover. Use an oil-based marker or similar.
- **Collecting the refrigerant**
  Do not recklessly discharge Freon (chlorofluorocarbon) into the atmosphere.
  It is necessary to collect the Freon.

– 1 –

0FGHP-EN0801 DGJ002

2 Combinations with Indoor Units

2 Combinations with Indoor Units

■ Possible combinations The following table shows the possible combinations with indoor units.

● GYEQ models

Model	GYEQ20AN	GYEQ30AN
Number of indoor units that can be connected	1-32 units	1-48 units
Number of indoor units that can be run simultaneously	1-32 units	1-48 units
Capacity range of indoor units that can be connected	50-130%	

BS Unit

Model	BSGQ100PV1	BSGQ160PV1	BSGQ250PV1
Total capacity range of indoor units that can be connected	Q ≤ 11.2 kW	11.2 < Q ≤ 18.0 kW	18.0 < Q ≤ 28.0 kW
Number of indoor units that can be connected	5 units or less	8 units or less	8 units or less

Note 1: If simultaneous operation is performed by a system in which the total capacity of the indoor units exceeds 100%, the capacity of each indoor unit may be slightly lower than rated.

Note 2: Indoor units above 250 cannot be connected.

■ Accessories Check that your outdoor unit comes with the following accessories:

Model	Packing	Refrigerant fluid pipe flange	Refrigerant gas pipe flange (suction)	Refrigerant gas pipe flange (discharge)	M6 bolt	M10 bolt	Drain hose	Stopper (Stop valve) *1
GYEQ20AN	3 pc	1 pc	1 pc	1 pc	12 pc	16 pc	1 pc	3 pc
GYEQ30AN	3 pc	1 pc	1 pc	1 pc	12 pc	16 pc	1 pc	3 pc

Model	External filter for gas pipe	External filter for fluid pipe	External filter flange for gas pipe	External filter flare joint for fluid pipe	External filter heat insulator for gas pipe	External filter heat insulator for fluid pipe	External filter gasket for gas pipe
GYEQ20AN	2 pc	1 pc	4 pc	2 pc	2 pc	1 pc	4 pc
GYEQ30AN	2 pc	1 pc	4 pc	2 pc	2 pc	1 pc	4 pc

* 1. The stop valve is opened before use during the test run. Take care not to lose the stopper.

[Configuration of external filter standard accessories]

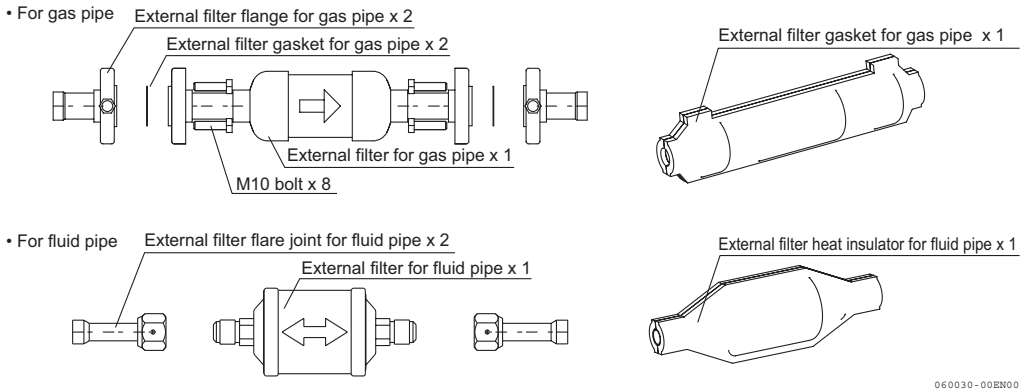

(Optional parts)

During installation work, optional parts are necessary to branch the refrigerant piping.
Refrigerant branch kits (REFNET Joint and Header) are available as options.
Select options suitable for the actual piping layout. Refer to the items in 6. Installing the Outdoor Unit before making the selection.
Be sure to use refrigerant branch kits designed specifically for use with R410A.
Consult your authorized Daikin dealer or distributor for any questions.

3 Selection of Installation Location

■ Notes on Selecting the Installation Location

⚠WARNING

- **Install the outdoor unit so that the exhaust gas does not enter building interiors through windows, intake and exhaust vents, piping leading to interiors, air vents, etc.**
- **Do not install the outdoor unit inside or partly inside a building.**
  -Installing the unit in an environment where exhaust gas does not easily diffuse can cause carbon monoxide poisoning.
- **Install the outdoor unit in a location that can support its weight and will not increase noise or vibration.**
- **Install the outdoor unit in an open space so that exhaust gas does not accumulate. Do not install the unit inside a building.**
- **Do not install the outdoor unit in a location where dangerous flammable materials are handled.**

⚠CAUTION

- **Do not install the outdoor unit in a location where flammable gas may be generated, flow in, build up, or leak, or where volatile flammable items may be handled.**
- **Do not install the outdoor unit in a location where air or exhaust gas may blow against the windows and garden plants of neighboring buildings and houses when the unit is operating.**
- **Do not install the outdoor unit in a location where there are exhaust vents or chimneys that may cause the outdoor unit to corrode or cause foreign substances to adhere to the air-to-heat exchanger and/or noticeably soil the unit exterior.**
- **Do not install the outdoor unit in a location where there are street lights or trees beside the outdoor unit as insects or leaves may block the air-to-heat exchanger.**
- **Install the outdoor unit in a location where materials can be carried in smoothly, the product can be installed efficiently and supported firmly, and maintenance service can also be performed easily and safely. (Special care must be given to existing buildings; they may experience problems with structural strength and vibration transmission.)**
- **Please consult us when the product is to be used in corrosive environments, such as chemical plants or areas prone to salt corrosion.**
- **When installing the outdoor unit under a roof, take measures to prevent rainwater from pouring into the air inlet and outlet of the unit.**
- **Install the outdoor unit in a well-ventilated location where hot exhaust (in summer) or cold exhaust (in winter) from the air-to-heat exchanger will not accumulate or cause short circuits. Poor ventilation may result in the following malfunctions:**
  (1) Insufficient heat exchange may cause reduced capacity.
  (2) The safety protection device may work frequently due to overloaded operation.
  (3) Exhaust gas from the engine may mix with the intake air, causing incomplete combustion and resulting in malfunctions.
- **Do not install the outdoor unit in a location where strong winds may blow against the air outlet on the outdoor unit.**
- **Do not use a pit (push-in) method of installation.**

3 Selection of Installation Location

⚠CAUTION

- **Install the outdoor unit in a location where there are no areas under or near the outdoor unit in which noise and vibration could pose a serious problem.**
  (Special care must be given when operating in residential areas.)
  (1) For vibration isolation materials, be sure to use a vibration isolator designated by Daikin.
  (2) Inspection and certification are performed only for optional items designed specifically for the Daikin GHP.
  Using items not specifically designed for use by the Daikin GHP may cause problems like abnormal vibration, etc.
- **Install the outdoor unit in a location where there are no walls near the outdoor unit that could reflect or resonate with the operating sound.**
  There must be enough space to construct a soundproofing wall for operational noise.
- **Install the outdoor unit in a location where sufficient space can be retained for the safe performance of maintenance services when constructing a signboard tower or soundproofing wall around the outdoor unit.**
- **Install the outdoor unit in a location where piping work can be performed using a refrigerant piping length and height difference that conform to the relevant regulations.**
- **Install the outdoor unit in a well-drained, flat location where rainwater will not form puddles or high water.**
- **Take care not to let fan-driven exhaust blow against or operating sound transmit to neighboring buildings. (Special care must be given to installation areas where building are located close together.)**
- **To perform the cooling operation at the outdoor air temperature of 0 °C or lower, setting the memory switch for the outdoor unit with the use of AirGuard (option) is required. Refer to Test Run Manual for the setting method.**
- **Select a location where draining is possible.**
- **Install the unit on a level surface that can support the weight of the unit and maintain stability.**
- **Install the unit in a location where blow-out air from the air-to-heat exchanger and exhaust gas from the engine does not directly affect the others.**
- **Do not install a BS unit to the ceiling of a room under a bedroom or similar noise-sensitive rooms because the sound of flowing refrigerant can be perceived as an abnormal noise.**

4 Servicing Space Requirements for the Outdoor Units

- **The outdoor unit requires servicing space to perform periodical maintenance and other tasks. Make sure that there is sufficient servicing space in accordance with the following diagram.**
- **When anchoring the outdoor unit with anchor bolts, there should be a sufficient space for handling and tightening the anchor bolts.**

GYEQ20AN

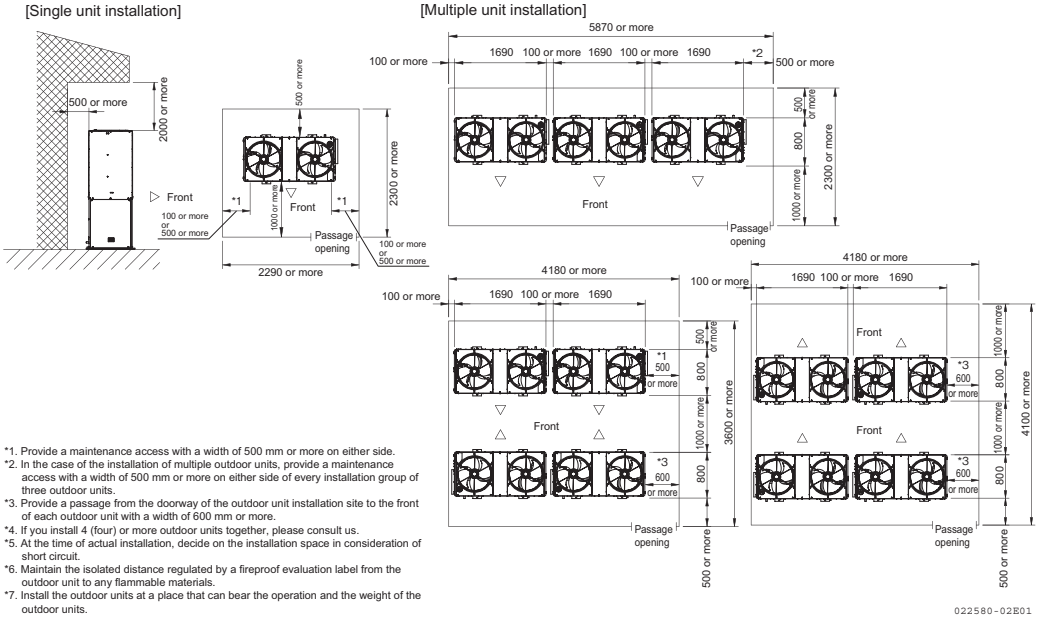

*1. Provide a maintenance access with a width of 500 mm or more on either side.
*2. In the case of the installation of multiple outdoor units, provide a maintenance access with a width of 500 mm or more on either side of every installation group of three outdoor units.
*3. Provide a passage from the doorway of the outdoor unit installation site to the front of each outdoor unit with a width of 600 mm or more.
*4. If you install 4 (four) or more outdoor units together, please consult us.
*5. At the time of actual installation, decide on the installation space in consideration of short circuit.
*6. Maintain the isolated distance regulated by a fireproof evaluation label from the outdoor unit to any flammable materials.
*7. Install the outdoor units at a place that can bear the operation and the weight of the outdoor units.

GYEQ30AN

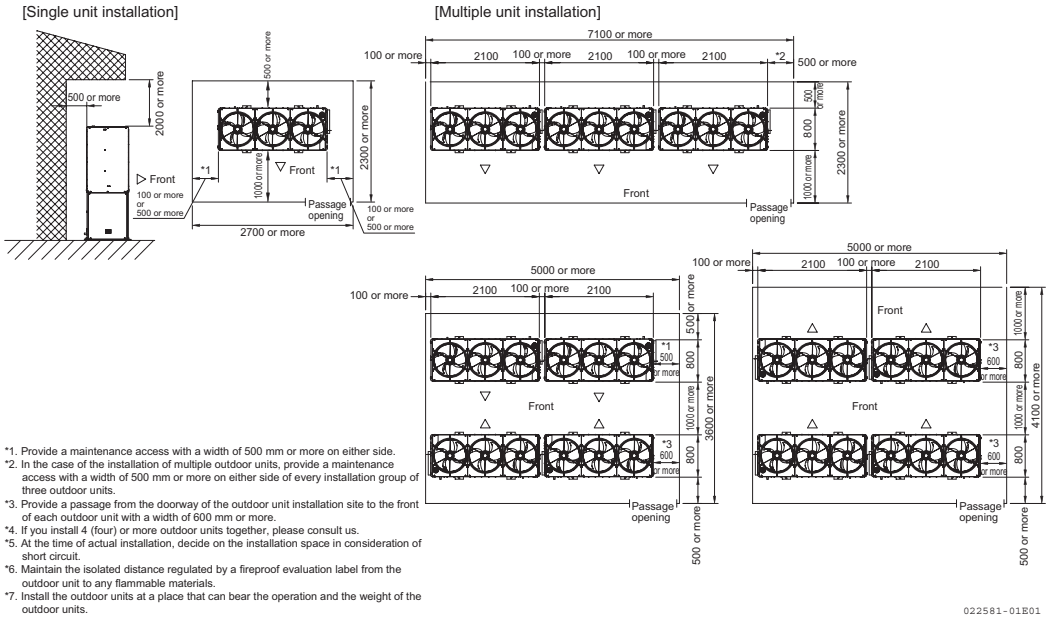

*1. Provide a maintenance access with a width of 500 mm or more on either side.
*2. In the case of the installation of multiple outdoor units, provide a maintenance access with a width of 500 mm or more on either side of every installation group of three outdoor units.
*3. Provide a passage from the doorway of the outdoor unit installation site to the front of each outdoor unit with a width of 600 mm or more.
*4. If you install 4 (four) or more outdoor units together, please consult us.
*5. At the time of actual installation, decide on the installation space in consideration of short circuit.
*6. Maintain the isolated distance regulated by a fireproof evaluation label from the outdoor unit to any flammable materials.
*7. Install the outdoor units at a place that can bear the operation and the weight of the outdoor units.

5 External Dimension Diagram/Servicing Space for External Filter

5 External Dimension Diagram/Servicing Space for External Filter

⚠WARNING ● **Since the external filter may need to be replaced, refer to the figure below and make sure that there is sufficient servicing space for the replacement.**

[External filter for gas pipe]

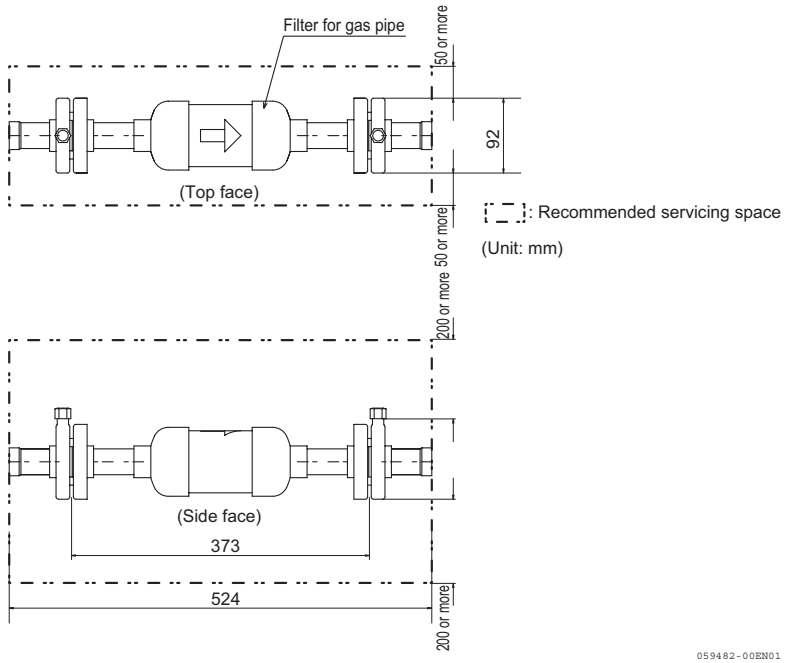

[External filter for fluid pipe]

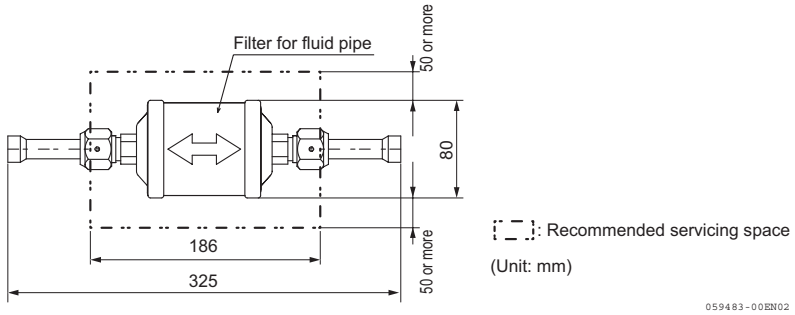

6 Installation Foundation for Outdoor Units

■ Notes on Foundation and Installation Work

Refer to the foundation drawings to execute foundation work for the outdoor unit; the foundation must be strong enough to support the weight of the outdoor unit and more than 100 mm higher than the floor surface to protect it from rainwater and dust. Provide a drain ditch around the foundation and give it a 1/50 downward pitch to lead the drain to the drain port.

⚠WARNING

- **To prevent the outdoor unit from falling over, install it on a hard and level foundation. Refer to the earthquake and storm safety section of the facility design manual for information regarding anchor bolt section.**
- **If anti-seismic installation is required, reconsider the foundation dimensions and fixing bolts according to the designated anti-seismic design standards.**

⚠CAUTION

- **When installing in locations with little soil bearing capacity (e.g. sand, clay or loam), be sure to do ground reinforcement work.**
- **When installing the outdoor unit on a rooftop or other high places, provide a ladder and handrails on the path as well as fences and handrails around the unit in order to prevent falls.**
- **When installing the outdoor unit to a rooftop, veranda or other exposed location in a residential areas where noise and vibration can be a problem, use a vibration proof stand.**
  Select the vibration proof grade and specification depending on the purpose and environment of the direct room. When installing in locations where noise and vibration can be a problem, exercise sufficient consideration for the surrounding.

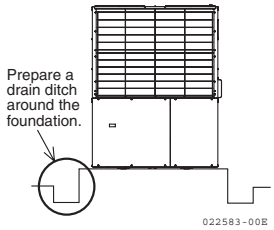

- **Adjust the installation surface of the vibration proof stand with a liner so that it becomes a level surface.**
- **For the installation of a vibration proof stand, refer to the vibration proof stand instruction.**
  Make sure to check the dimensions of the outdoor unit at the time of installation.
- **The standard blend ratio of concrete must be 1 part cement, 2 parts sand, and 4 parts ballast. Reinforce by inserting steel bars (φ 10) at an interval of approximately 300 mm.**
- **The foundation surface must be leveled with a finishing coat of mortar. The end face of the foundation must be chamfered.**
- **If the foundation is put on a concrete floor, macadam is not necessary, but the concrete surface should be rough.**
- **Provide a drain ditch around the foundation to complete draining from the unit.**
- **If the foundation is provided on the rooftop, special care must be given to the strength of the floor and waterproofing must be ensured.**
- **In the case of the elevated pad installation, take the elevated pad intervals and the strength of steel material into account. Install so that the deflection of steel material is 1/500 or below the elevated pad intervals, and the deflection is a maximum 2 mm or below.**

6 Installation Foundation for Outdoor Units

[Example of the direct-mount foundation]

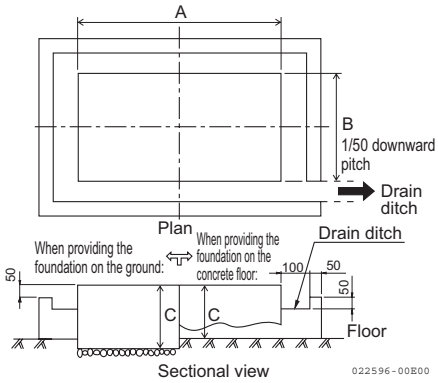

[Example of the elevated pad installation]

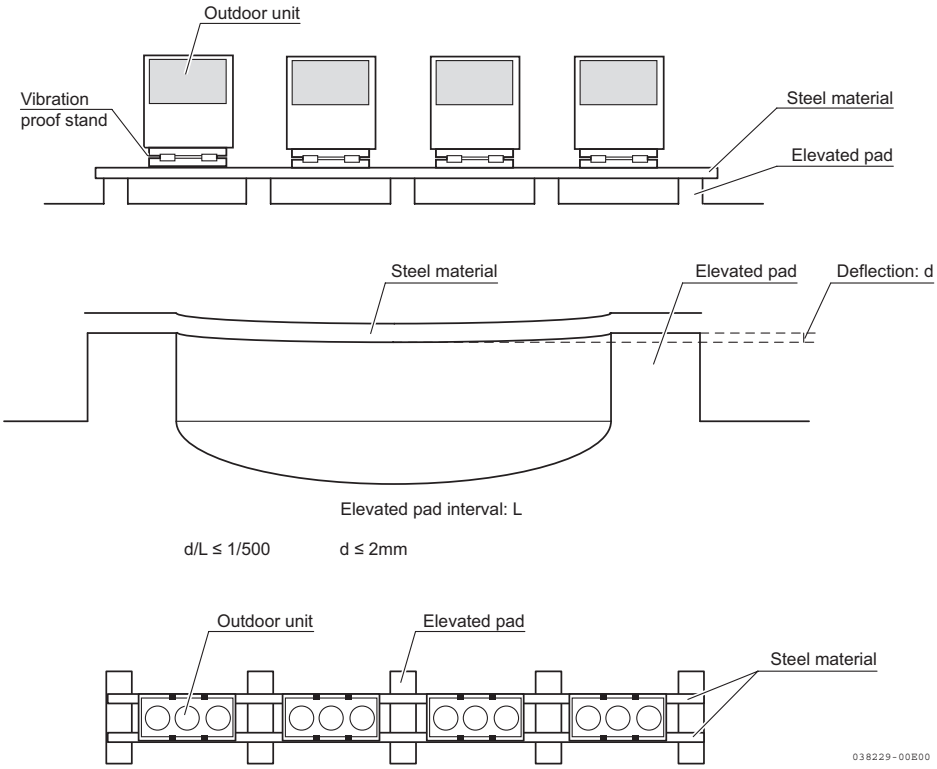

7 Installing the Outdoor Unit

Bringing the outdoor unit into the room

- **Decide in advance how you will transport the product to its installation location.**
- **Follow the instructions on how to transport the outdoor unit indicated on the paper attached to the front face of the outdoor unit.**

Preparing the refrigerant piping

Any tools and instruments used to handle the refrigerant and the refrigerating machine oil during installation work should be designed specifically for use with the R410A.

■ Piping materials

The refrigerant piping used should be made of the following material:

- **Material:** Phosphate deoxidized seamless copper tube

Pipe size

Size	φ 6.4	φ 9.5	φ 12.7	φ 15.9	φ 19.1	φ 22.2	φ 25.4	φ 28.6	φ 31.8	φ 38.1
Wall thickness	t0.8	t0.8	t0.8	t1.0	t1.0	t1.0	t1.0	t1.0	t1.1	t1.4

■ Selecting the correct pipe size

- **Piping between the outdoor unit and refrigerant branch kit**

The size of the pipes used should match the outdoor unit's pipe size.

When you use long pipes (with an equivalent length of 90 m or greater), you can use a gas pipe that is one size larger than the pipe diameter indicated in the table on the right hand to minimize loss of cooling performance due to the pipe length. (Reducer joints should be locally procured if needed.) However, only when the outdoor unit is installed in a location higher than the indoor unit with a height difference more than 50 m but less than 70 m, using a gas pipe that is one size larger than the pipe diameter to minimize the loss of performance with long pipes is not possible.

Outdoor unit capacity	Pipe size (outside diameter x minimum wall thickness) (in mm)		
	Suction gas pipe	Discharge gas pipe	Fluid pipe
GYEQ20AN	φ 28.6 x 1.0 t	φ 22.2 x 1.0 t	φ 15.9 x 1.0 t
GYEQ30AN	φ 31.8 x 1.1 t	φ 28.6 x 1.0 t	φ 19.1 x 1.0 t

7 Installing the Outdoor Unit

- **Piping between the refrigerant branch kit/BS units and refrigerant branch kit/BS units**

Choose one of the sizes from the table on the right hand depending on the total capacity of indoor units connected downstream.
Pipes interconnecting the branch kits must not exceed the size of the refrigerant pipes connected to the outdoor unit.

	Total capacity of indoor units connected downstream	Suction gas pipe	Discharge gas pipe	Fluid pipe
• Refrigerant branch kit to refrigerant branch kit • Refrigerant branch kit to refrigerant branch kit	Less than 7.0 kW	φ 12.7 x 0.8 t	φ 9.5 x 0.8 t	φ 6.4 x 0.8 t
	7.0 kW or more but less than 22.4 kW	φ 15.9 x 1.0 t	φ 12.7 x 0.8 t	φ 9.5 x 0.8 t
	22.4 kW or more but less than 33.0 kW	φ 22.2 x 1.0 t	φ 19.1 x 1.0 t	
	33.0 kW or more but less than 47.0 kW	φ 28.6 x 1.0 t		φ 12.7 x 0.8 t
	47.0 kW or more but less than 71.0 kW		φ 22.2 x 1.0 t	φ 15.9 x 1.0 t
	71.0 kW or more	φ 31.8 x 1.1 t	φ 25.4 x 1.0 t	φ 19.1 x 1.0 t
• BS unit to refrigerant branch kit • Refrigerant branch kit to refrigerant branch kit	Less than 7.0 kW	φ 12.7 x 0.8 t	-	φ 6.4 x 0.8 t
	7.0 kW or more but less than 22.4 kW	φ 15.9 x 1.0 t		φ 9.5 x 0.8 t
	22.4 kW or more but less than 28.0 kW	φ 22.2 x 1.0 t		

- **Piping between the refrigerant branch kit/BS units and indoor units**

The size of the pipes used should match the indoor unit's pipe size.

Indoor unit capacity	Pipe size (outside diameter x minimum wall thickness) (in mm)	
	Gas pipe	Fluid pipe
20/25/32/40/50	φ 12.7 x 0.8 t	φ 6.4 x 0.8 t
63/71/80/100/125/140/145	φ 15.9 x 1.0 t	φ 9.5 x 0.8 t
180/200	φ 19.1 x 1.0 t	φ 9.5 x 0.8 t
250	φ 22.2 x 1.0 t	φ 9.5 x 0.8 t

7 Installing the Outdoor Unit

■ Selecting the refrigerant branch kits (REFNET Joints and headers)

- **REFNET Joints and headers should be selected from the table below based on the total capacity of the indoor units.**
- **No additional branch can be added downstream of REFNET header. Model 250 or higher indoor units cannot be connected downstream of the header.**
- **Branching pipes for R22 / R407C cannot be used in place of branching pipes for R410A. Be sure to use branching pipes designed specifically for use with R410A.**

Selecting REFNET Joint

First branch (the first branch with respect to the outdoor unit)

Outdoor unit capacity	REFNET Joint part number
GYEQ20AN	KHRP25A72T
GYEQ30AN	KHRP25A73T

Between the second branch and BS unit, downstream of BS unit

Total capacity of indoor units connected downstream Total capacity	Between the second branch and BS unit (3 pipes)	Downstream of BS unit (2 pipes)
	REFNET Joint part number	REFNET Joint part number
Less than 22.4kW	KHRP25A22T	KHRP26A22T
22.4 kW or more but less than 33.0 kW	KHRP25A33T	KHRP26A33T
22.4 kW or more but less than 71.0 kW	KHRP25A72T + KHRP25M72TP	-
71.0 kW or more	KHRP25A73T + KHRP25M73TP	-

Selecting REFNET Headers

Total capacity of indoor units connected downstream Total capacity	Between the second branch and BS unit (3 pipes)	Downstream of BS unit (2 pipes)
	REFNET Headers part number	REFNET Headers part number
Lower than 22.4 kW	KHRP25M33H	KHRP26M22H
22.4 kW or more but less than 33.0 kW		KHRP26M33H
22.4 kW or more but less than 71.0 kW	KHRP25M72H	-
71.0 kW or more	KHRP25M73H	-

7 Installing the Outdoor Unit

■ Refrigerant piping configuration, allowable piping lengths, and allowable height differences

Make sure that the refrigerant piping lengths and height differences are within the following ranges.

● **Piping side**

Cooling/heating mix operation units require BS units (units that allow switching between cooling and heating mode).

You can switch between cooling and heating on each BS unit.

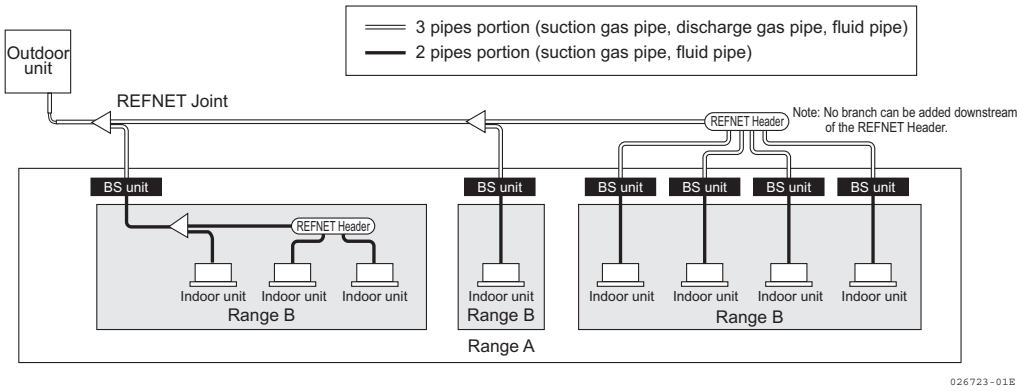

● **Allowable piping lengths and allowable height differences**

Maximum allowable length *1		Allowable height differences		Height differences between BS units	Allowable length ℓ2 *3 after the first branch *2
Actual length	Equivalent length	Height difference between outdoor and indoor units	Height difference between indoor units: H2		
170 m or less	200 m or less	50 m or less	15 m or less *4	15 m or less *4	90 m or less

*1: Piping length from the outdoor unit to the farthest indoor unit

*2: First branch as seen from the outdoor unit

*3: BS units may be installed anywhere between the first branch and the indoor unit if that length is within 60 m.
However, the height difference between BS units should not exceed the value of H2 (m).

*4: When the length after the first branch (ℓ_2) is over 40 m, use the height difference between the outdoor and indoor units should not exceed the value of H2 given by the following formula.

When ℓ_2 is within the range of 40 to 60m: $H2=37-\frac{11}{20}\times\ell_2$(m)

When ℓ_2 is within the range of 60 to 90 m: $H2=11-\frac{7}{60}\times\ell_2$(m)

■ What is the equivalent piping length?

Equivalent length: the sum of the actual piping length plus the straight piping length equivalents of the resistance of the respective parts of REFNET Joints and Headers and BS units.

□ **Straight pipe equivalent lengths of joints (m)**

Type \ Pipe diameter	φ 6.4	φ 9.5	φ 12.7	φ 15.9	φ 19.1	φ 22.2	φ 25.4	φ 28.6	φ 31.8	φ 38.1	φ 44.5
L joint	0.16	0.18	0.2	0.25	0.35	0.4	0.45	0.5	0.55	0.65	0.75

REFNET Joint	0.5	BS unit	BSGQ100/160PV1	6.0
REFNET Header	1.0		BSGQ250PV1	15.0

7 Installing the Outdoor Unit

Refrigerant piping work and connection

This section provides instructions to follow when performing refrigerant piping work.

- **Only use copper pipes that have clean inner surfaces (e.g. free of moisture and dust).**
  When you cut a refrigerant pipe, be sure to use a pipe cutter. Before connecting the pipes, flush them with nitrogen gas to blow out any dust inside. Avoid using a saw, grindstone, or any other tool that generates a large amount of chips. Connecting pipes with moisture or dust remaining on their inner surfaces could possibly result in serious damage.

□ **Precautions on refrigerant piping work (examples)**

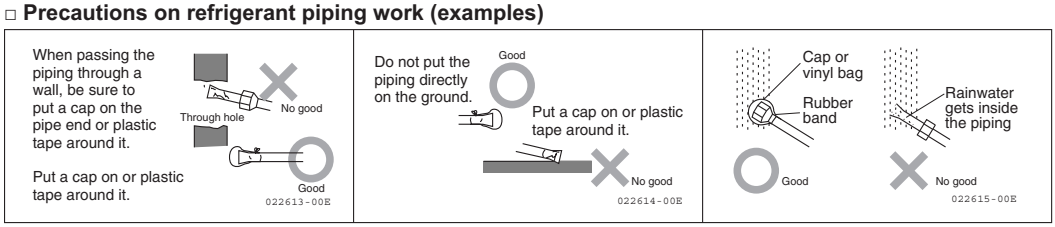

- **Fit flare nuts on pipe ends before expanding the pipes. To connect each flare nut, follow these steps: 1) Lubricate the outer circumference of the flare with refrigerating machine oil equivalent to an oil used for the outdoor unit's compressor; 2) Manually screw in the flare nut by turning it 3 or 4 turns; 3) Tighten the flare nut with the specified torque.**
- **When you bend a pipe, make the bending radius as large as possible. Do not repeatedly bend a pipe.**
- **When you cut a pipe, use a copper cutter and cut the pipe with as small a notch as possible so that no burr occurs inside the pipe.**
- **When you chamfer the inner surface of a pipe after cutting it, use a dedicated tool and deburr the cut surface.**
- **When you flare the cut end, use a dedicated tool and flare it into one of the sizes listed in the table on the right.**
- **The stop valve that belongs to the outdoor unit and the flange gasket of the external filter must not be installed until braze welding is complete.**

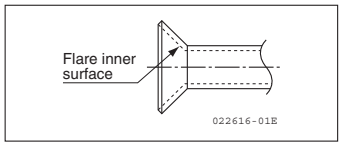

Flare shape

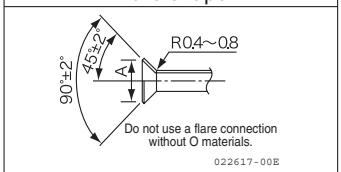

Pipe size (outside diameter)	Flare dimension A (mm)
φ 6.4	8.7 to 9.1
φ 9.5	12.8 to 13.2
φ 12.7	16.2 to 16.6
φ 15.9	19.3 to 19.7

7 Installing the Outdoor Unit

- **When braze-welding a copper pipe, be sure to blow with nitrogen (this is an absolute requirement for braze welding).**
  Perform braze welding with nitrogen gas flowing through the copper pipe from one end to the other end. Cover the end of the copper pipe from which you blow in the nitrogen with tape to prevent air from getting sucked in. Braze welding without blowing nitrogen would generate oxide layers that might possibly clog the unit during operating cycles, resulting in a serious accident.

  • Nitrogen blow prevents the formation of oxide layers in copper pipes.
  • Do not blow with other gases than nitrogen.
  • Do not use an antioxidant which may adversely affect the refrigerant or refrigerating machine oil.

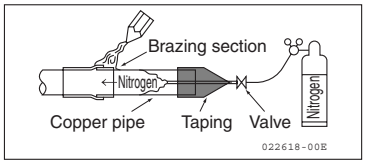

- **Phosphor copper braze is recommended as brazing filler metal.**
- **During installation or repair, do not use fire if the air contains refrigerant gas.**
- **After the braze welding, wipe off flux with a damp cloth or similar.**
- **Avoid the use of a (reverse) right-angled expansion pipe for installation. It can cause serious damage to the compressor.**
- **Use a double-ended spanner to tighten the flare nut, and finally use a torque wrench to make sure that the nut is tightened with the appropriate torque. Take care not to overtighten and break the flare. Hold the union side securely so that it will not turn.**

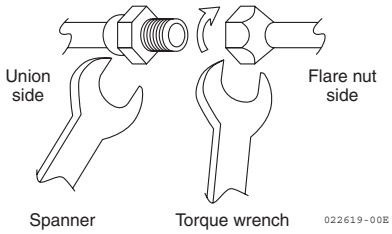

Performing piping work using the external filter

⚠WARNING

- **Install the external filter close to the outdoor unit.**
- **When the vibration proof stand is used, do not install the external filter close to the outdoor unit.**
  The vibration of the outdoor unit may break the pipe and cause a refrigerant leak.
- **Fix the piping on both ends of the external filter. When the piping fixation is insufficient, the vibration breaks the pipe and causes a refrigerant leak.**
- **When braze welding is performed on the pipe, be sure to use nitrogen blow. Without nitrogen blow, it may cause filter clogging with oxidized scale, compressor trouble, etc.**

Install the external filter on the refrigerant pipe for each outdoor unit. Refer to the installation example and determine the installation position.

- **When braze welding is performed on the external filter for the gas pipe, be sure to remove the gasket.**
- **When braze welding is performed on the gas pipe flange, cool the flange base using a damp cloth or the like.**
- **Apply refrigerating machine oil (FVC68D) to the gas pipe flange gasket portion.**
- **Loosely tighten the gas pipe flange bolts, and then fully tighten them diagonally. (Tightening torque: 49±5.0 N·m)**
- **Tightening torque for fluid pipe flare is 61.8 ~ 75.4 N·m.**
- **Be careful of the direction of the external filter for the gas pipe (indoor unit side ⇨ outdoor unit side).**
- **Install the external filter servicing port for the gas pipe in a direction that allows maintenance to be performed.**
- **Install the filter between the first and second clamps of the connecting pipe, in a position from where maintenance can be performed.**
- **Install the external filter to a position where the heat insulator can be removed.**
- **For the first and second clamps, clamp one side of the fluid pipe external filter within 0.3m from center and clamp the gas pipe external filter within 0.75m from center.**
- **Since the filter may need to be replaced, locally procured finishing and racking should be fitted so that they can be desorbed.**
- **When the racking, etc. is not fitted, perform waterproofing to the external filter heat insulator.**

[Installation example]

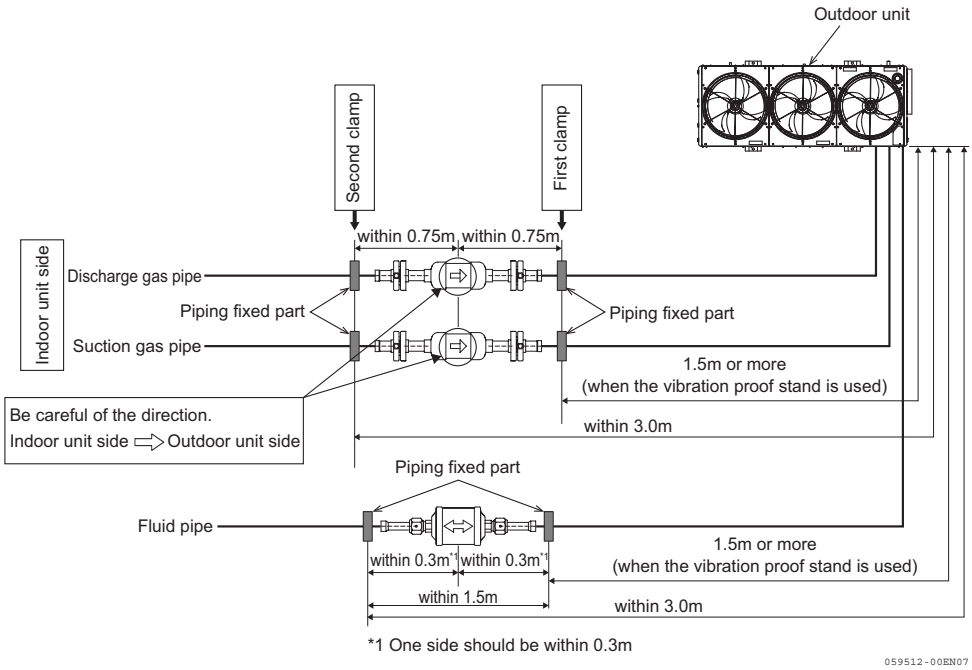

7 Installing the Outdoor Unit

■ Performing piping work using the refrigerant branch kits (REFNET Joints and Headers)

- **Be sure to use refrigerant branch kits designed specifically for use with R410A.**
- **Be sure to heat-insulate the branch kits in accordance with the supplied manual.**

(1) REFNET Joints
(Gas side/fluid side branching pipes)

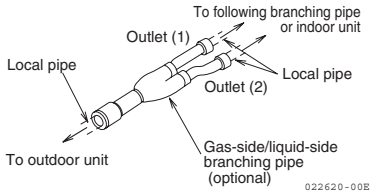

- **REFNET Joints should be installed so that the branches are arranged horizontally or vertically.**

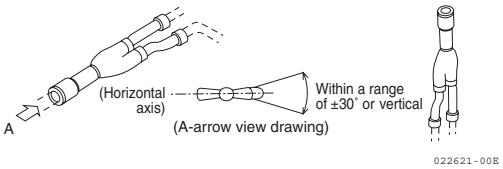

(2) REFNET Headers
(Gas side branching pipe) (Fluid side branching pipe)

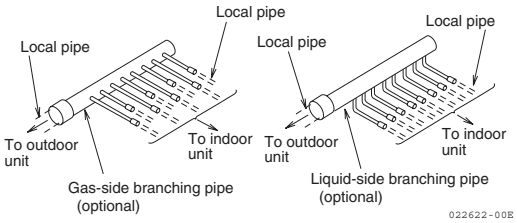

- **If the number of actually connected indoor units is smaller than the maximum number of indoor units that can be connected to the branching pipe, connect a closed pipe to each of the unnecessary branches.**

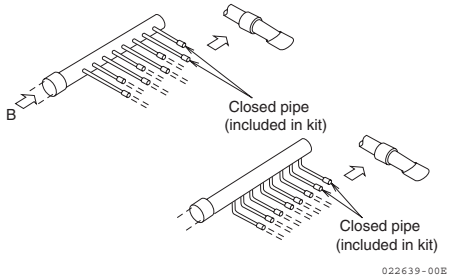

- **REFNET Headers should be installed so that the branches are arranged horizontally.**

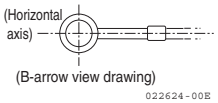

- **If you use a locally procured pipe that does not exactly match the branch size, cut the connecting portion using a pipe cutter as shown in the figure below.**

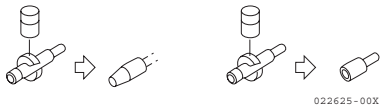

- **Make sure that the gas side and fluid side kits are for the R410A.**

* "Gas side" refers to both suction gas side and discharge gas side.

7 Installing the Outdoor Unit

■ Connection to the outdoor unit

There is a closing valve inside the outdoor unit.

GYEQ20AN

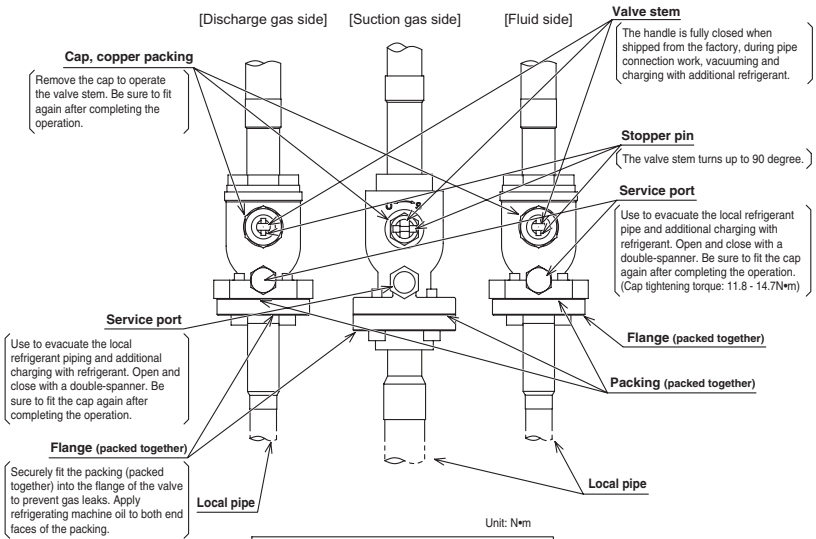

Unit: N•m

Flare nut tightening torque	
M6 hexagon socket head cap screw	11±1

GYEQ30AN

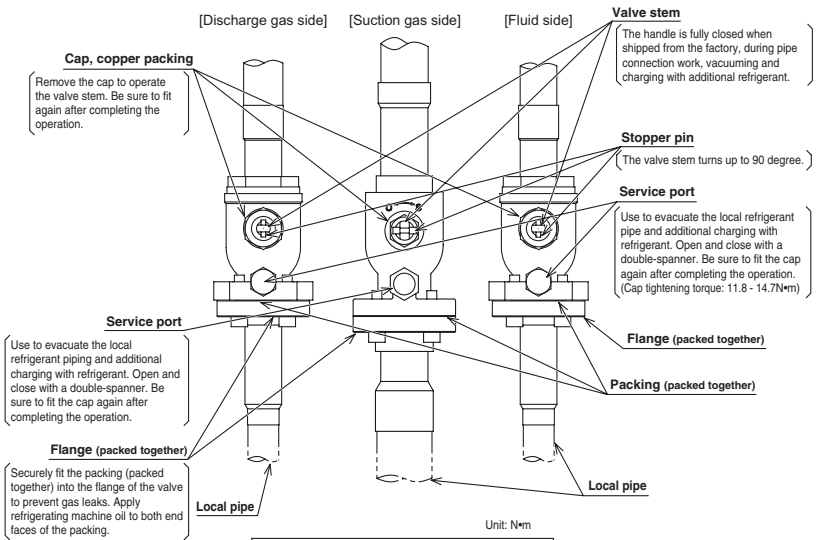

Unit: N•m

Flare nut tightening torque	
M6 hexagon socket head cap screw	11±1

7 Installing the Outdoor Unit

■ Cautions for refrigerant leaks

⚠WARNING ● **The room where the air conditioning unit is installed must be large enough to prevent the refrigerant gas concentration from reaching a dangerous level even if a gas leak occurs. Verify the concentration and take appropriate measures if it exceeds a dangerous level.**

● **Introduction**

Daikin Gas Heat Pump Air Conditioning Units use R410A as their refrigerant. R410A is a safe, nontoxic, noncombustible refrigerant, but the room where the air conditioning unit is installed must be large enough to prevent the refrigerant gas concentration from reaching a dangerous level if a gas leak occurs.

To address this, important points relating to R410A are presented below, along with an explanation of conformation procedures for refrigerant concentration and relevant handling methods.

● **Terms and definitions**

• **RCL (Refrigerant concentration limit in an enclosed space)**

The acceptable concentration of refrigerant, which is the maximum concentration of refrigerant in the air specified to reduce the risk of acute toxicity, oxygen deficiency and inflammability.

• **QLMV (Refrigerant concentration limit in a space with minimum ventilation)**

The maximum concentration, which is not reached even with the leakage of the full refrigerant amount in a residing space with an opening of 0.0032 m^2.

• **ODL (Refrigerant concentration limit for oxygen deficiency)**

The refrigerant concentration determined to not cause any physiological abnormality due to the lack of oxygen.

• **Residing space**

Residing space is defined as a space surrounded by walls, a floor and ceiling, and in which people commonly reside for a relevant time. It does not not include the plenum space or the space under the access floor (Fig. 1). Warehouse and storage are not considered residing space.

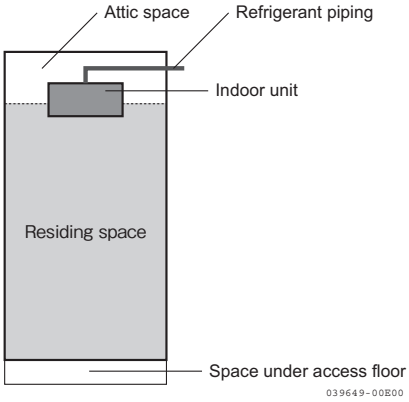

Fig. 1 Definition of Residing Space

7 Installing the Outdoor Unit

● **Basic Content**

The full refrigerant amount in the system (kg) divided by the minimum residing space volume (m^3) with the indoor unit connected to the system must be the specified RCL (Table 1) or below (refer to Formula 1).

The residing space volume defined here may include the space below the floor if the floor is permeable, e.g. for floor ventilation. Both the plenum space and the residing space can be included depending on the shape of the indoor unit (Fig. 2). However, if the ceiling material is permeable (e.g. mesh ceiling), the plenum space and the residing space cannot both be included.

Formula 1: Full charged refrigerant amount in the system (kg) / residing space volume (m^3) ≤ RCL

Table 1

Unit: kg/m^3

Refrigerant type	RCL	QLMV	ODL
R410A	0.39	0.42	0.42

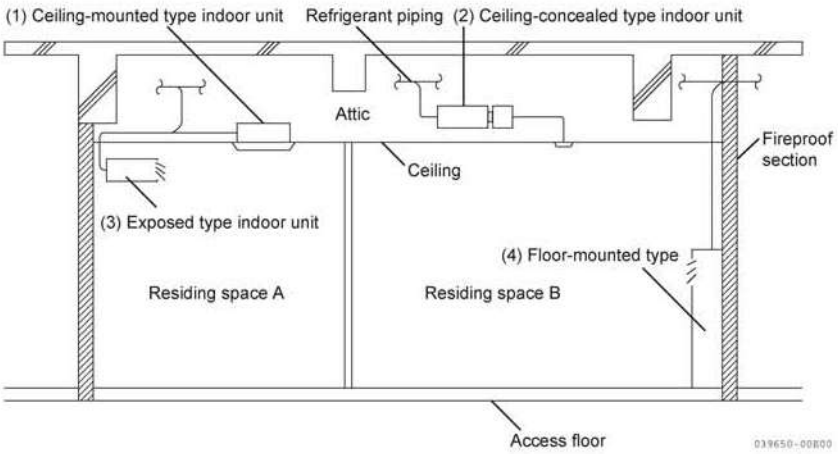

Shape of the indoor unit	Residing space volume *
(1) Ceiling-mounted type	Residing space A + Plenum space
(2) Ceiling-concealed type	Residing space A + B + Plenum space
(3) Exposed type	Residing space A
(4) Floor-mounted type	Residing space B
* The access floor that is permeable (e.g. floors with ventilation) can be included in the capacity calculation.	

Fig 2. Indoor Unit Shape and Residing Space Volume

7 Installing the Outdoor Unit

- **Corresponding Flow Chart for Refrigerant Leakage**

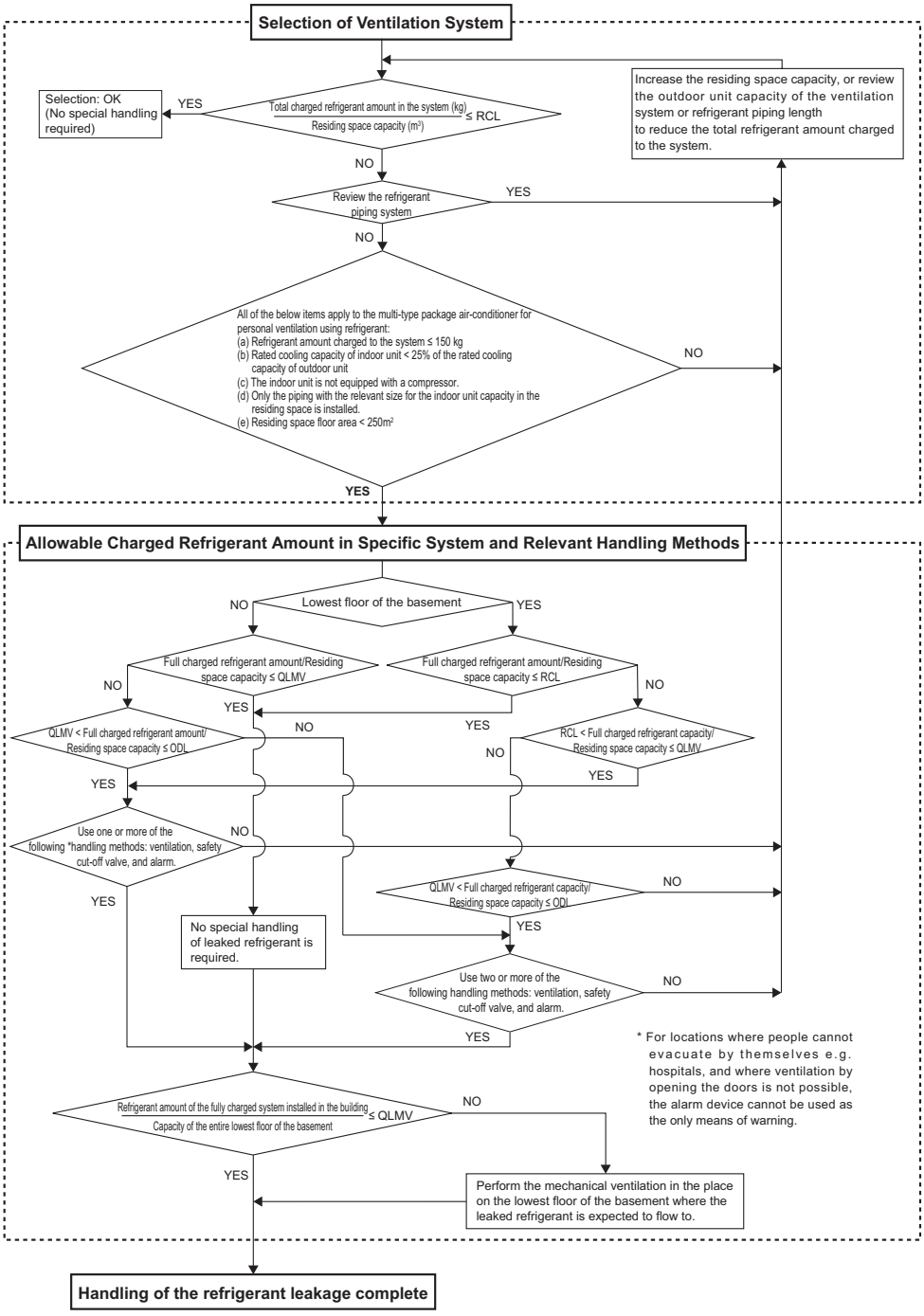

NOTE: For details on the handling method of the ventilation, safety cut-off valve, and alarm described in the flow chart, consult your dealer.

Fig 3. Corresponding Flow Chart for Refrigerant Leakage

7 Installing the Outdoor Unit

● **Allowable Charged Refrigerant Amount in Specific System and Relevant Handling Methods**

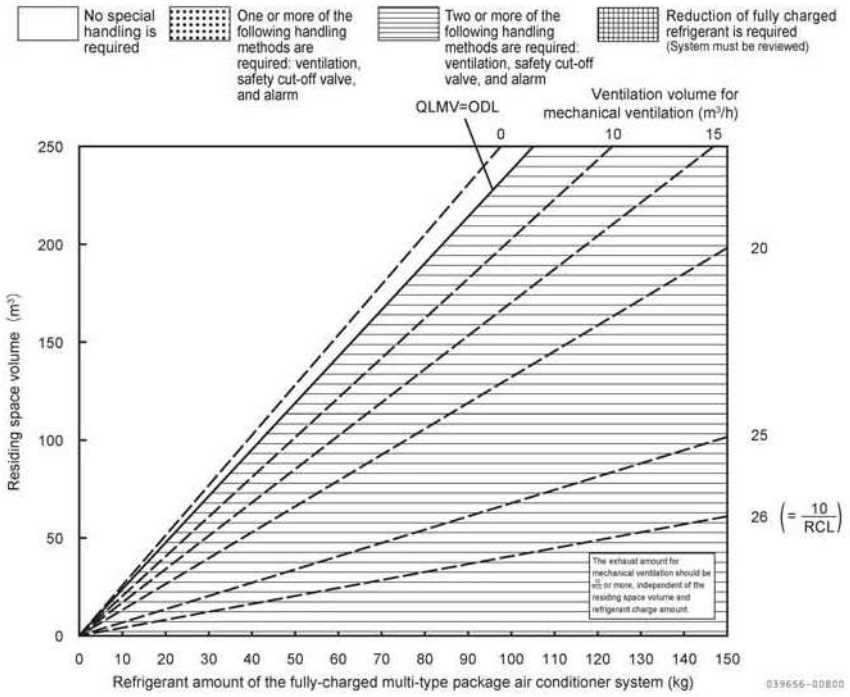

Fig. 4 Allowable Charged Refrigerant Amount in Specific System and Relevant Handling Methods (R410A Refrigerant)
If not the lowest floor of the basement

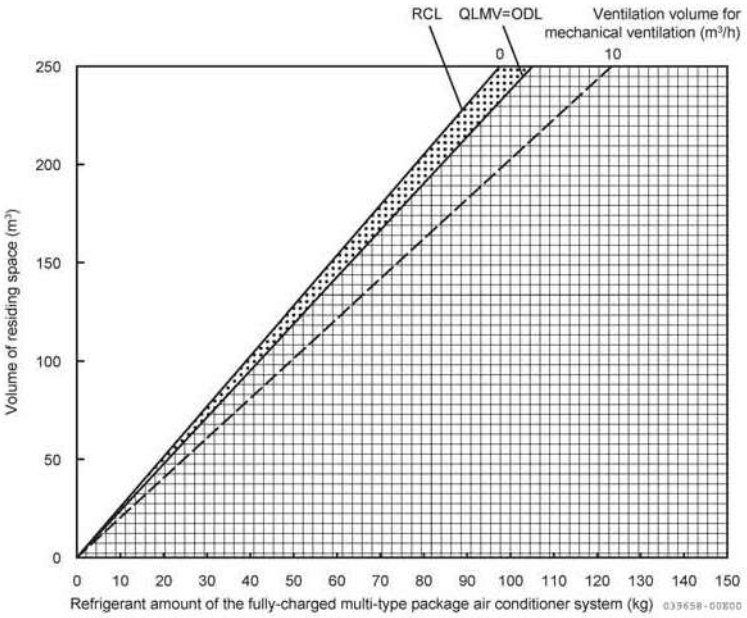

Fig. 5 Allowable Charged Refrigerant Amount in Specific System and Relevant Handling Methods (R410A Refrigerant)
The lowest floor of the basement

7 Installing the Outdoor Unit

■ Heat retention work

- **Be sure to heat-insulate both fluid and gas pipes.**
- **Use separate heat insulators to cover the fluid side and gas side pipes. Never use the same heat insulator to cover both fluid and gas pipes because doing so would result in performance loss and other problems.**
- **Material: Fiberglass or heat-resistant ethylene foam with a thickness of 10 mm or greater and with an allowable temperature limit of 120 °C or more (gas side) or 70 °C or more (fluid side).**
- **Finish with bond, tape or sheet so that the cut portions and joints of the heat insulators do not open.**
- **When wrapping the heat insulators with tape, take care not to bind the heat insulators too tightly, or they will be compressed resulting in poor heat insulation.**

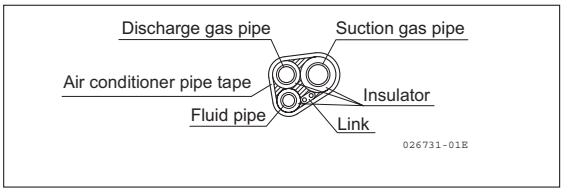

- **When wrapping the heat insulators with tape, take care to prevent their cut portions from opening. Also, take care not to bind the heat insulators too tightly, or they will be compressed resulting in poor heat insulation.**
- **When binding the indoor unit crossover cables together with a refrigerant pipe, lay the cables along the external surface of the heat insulator. Do not lay the cables inside the heat insulator because doing so would make the cables contact the refrigerant pipe and thermally deteriorate, resulting in poor insulation which could cause short circuit problems.**
- **Make sure that the link cable does not come into contact with any pipes that do not have a stop valve or heat insulator.**
- **Each pipe joint should be covered with a joint heat insulator and tightly bound with two clamps (after the air tightness test).**
- **Install the heat insulator (standard accessory) to the external filter.**
- **The external filter may be replaced. Therefore, the heat retention racking of the external filter should be fitted so as to allow it to be desorbed.**

[Figure of external filter heat insulator]

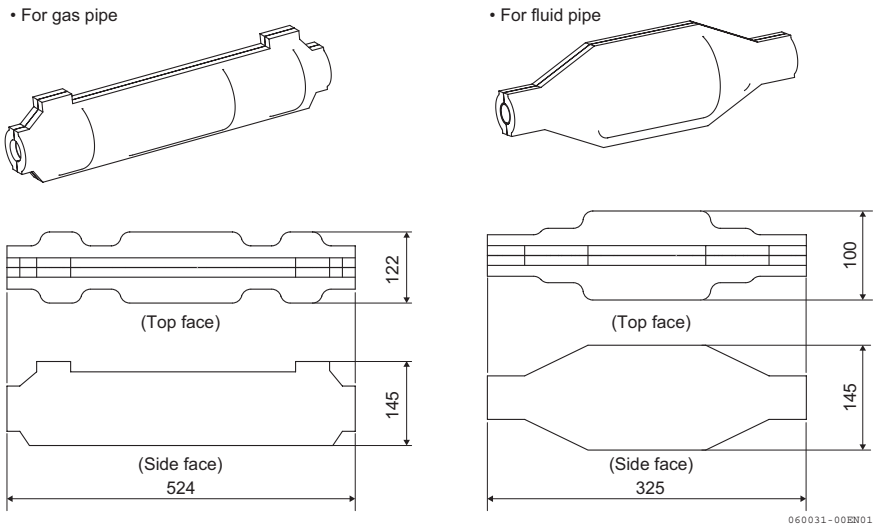

Air tightness test and evacuation of refrigerant piping

■ Air tightness test and evacuation

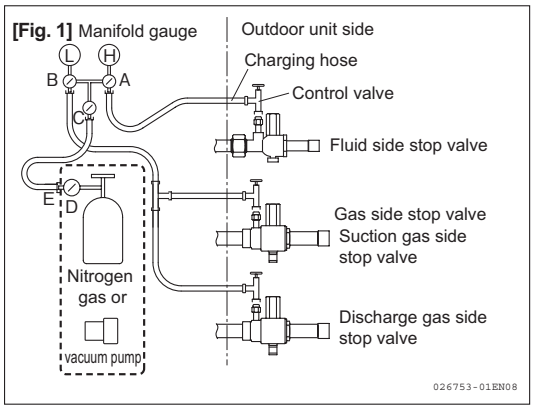

- **Use tools designed specifically for use with R410A refrigerant.**
- **Do not open the stop valve of the outdoor unit.**
- **Upon completion of the piping work, perform an air tightness test by pressurizing the piping to 4.0 MPa with nitrogen gas charged from the fluid and gas sides, as shown in Figure 1. Take care not to exceed 4.0 MPa.**
- **Do not use a gas different from nitrogen (oxygen or some other explosive gas).**
- **After pressurization, check the piping for leaks. Particularly, the connections with the outdoor and indoor units and the portions in the vicinity of closing valves should be thoroughly examined. You may use a soap solution to check for leaks, but make sure that the applied soap solution is perfectly wiped off to prevent rust.**
- **If no problems are found in the air tightness test, close valve D of the nitrogen gas cylinder, close valves A, B, and C of the manifold gauge, and then remove the nitrogen gas side hose joint E.**
- **Open valves A, B, and C of the manifold gauge to discharge nitrogen gas from inside the refrigerant piping and manifold gauge.**
- **Upon completion of the air tightness test (after discharging nitrogen gas), evacuate the piping from the gas side using a vacuum pump, as shown in Figure 1.**
- **Be sure to use a control valve (also called a charging valve) because air comes in when the charging hose is removed.**
- **The vacuum pump used must be capable of providing a negative pressure of -0.101 MPa or less. Before using the pump, make sure that a negative pressure of -0.101 MPa or less is reached using a vacuum gauge.**
- **The air tightness test and evacuation tasks are important to prevent faults due to refrigerant leaks or moisture. Make sure that they are performed.**

7 Installing the Outdoor Unit

Normal vacuum drying

(1) Vacuum drying: Evacuate the piping from the fluid and gas (both intake gas and discharge gas for AFZP models) sides of the outdoor unit's closing valve as well as from the servicing port. If a negative pressure of -0.101 MPa or less is attained during continuous evacuation for two hours or longer, then the vacuum drying process is complete.

- If a negative pressure of -0.101 MPa or less cannot be attained, continue evacuation for one additional hour.
- If a negative pressure of -0.101 MPa or less cannot be attained over three hours, conduct the air tightness test again.

(2) Vacuum retention test: After evacuating the piping to -0.101 MPa or less, leave it for one hour. If the gauge reading is retained for one hour, then the vacuum retention test is successful.

- If the gauge reading has risen, chances are that there is moisture remaining inside the piping or a leak exists. If this is the case, perform the special vacuum drying process (described below) or conduct the air tightness test again.

Special vacuum drying

If there is a possibility of water invasion into the piping as is the case with piping work that takes a long period of time or that is done during a rainy season, perform the special vacuum drying process described below:

Vacuum break: Using nitrogen gas, pressurize the piping to 0.0490 MPa.

(1) Vacuum drying ⟶ (2) Vacuum break (N_2: 0.0490MPa ⟶ (3) Vacuum drying (1 hour)

Degree of vacuum reaches -0.101 MPa or lower

NO ↓ Vacuum drying for two additional hours

YES ↓ (4) Vacuum retention test

Degree of vacuum reaches -0.101 MPa

NO ↓ Air tightness test again

YES

– 24 –

0FGHP-EN0801 DGJ002

Piping work for outdoor unit exhaust drain and condensed water drain pipes

■ Precautions on drain piping work

⚠WARNING

- **Separate pipes must be used for outdoor unit exhaust drain and for indoor unit drain. Sharing the same pipe between these two purposes could possibly cause intoxication due to exhaust gas backflow or a fault due to corrosion of a circuit board or some other part of the indoor unit.**
- **If you plan to discharge outdoor unit exhaust drain into a drain container or ditch with a lid or to discharge both outdoor unit exhaust drain and indoor unit drain into the same place, configure the piping so that exhaust gas contained in exhaust drain is emitted into the atmosphere. (Discharge the exhaust drain into the open air as illustrated below.)**

⚠CAUTION

- **Separate pipes must be used for exhaust drain and for condensed water drain, and the exhaust drain pipe must be prevented from exhaust gas backflow. Exhaust gas backflow may result in a fault due to rusting of parts inside the engine room.**
- **Make sure that the extension hose is free from vertical warping, water accumulation, and clogging.**
  During cold seasons, drain water inside the pipe may freeze, rendering the engine inoperable. If there is a possibility of freezing, the pipe must not exceed the maximum length at which a gradient can be obtained. After cutting the pipe at that length, fix it to a drainpipe or similar so that drain can flow through the discharging end.
- **When it is unavoidable to collectively install the drain pipes of two or more units, make sure that they are not exposed to exhaust pressure. If collectively installed pipes are exposed to exhaust pressure, exhaust may flow back into the outdoor unit when it is idle, possibly resulting in malfunction.**
- **If the outdoor unit is installed on a balcony or similar location and the roof is covered with a waterproof sheet, extend the outdoor unit exhaust drain pipe without damaging the waterproof sheet and so that the drain water is discharged into suitable public drainage. Make sure that you comply with relevant laws.**
- **The drain pipes used should be made of rigid PVC. (Locally procured)**
- **Ensure that the piping has no vertical bends (downward or upward) to avoid the accumulation of drain water in the collective pipings.**
  Also, attach supports to avoid the pipes from loosening.

Accessories	Drain hose	Hose $^{outside}/_{inside}$ diameter φ 19 / φ 14 × 0.5 m

Exhaust drain pipe

Attach the drain hose (standard accessory) and extend the pipe so that the drain water is discharged into suitable public drainage. Make sure that you comply with relevant laws. The discharging end should be fixed. When multiple units are installed, each unit should have individual piping.

Condensed water drain pipe

Attach the drain hose for the refrigerant container and extend the pipe so that the drain water is discharged into suitable public drainage. Make sure that you comply with relevant laws. The discharging end should be fixed.

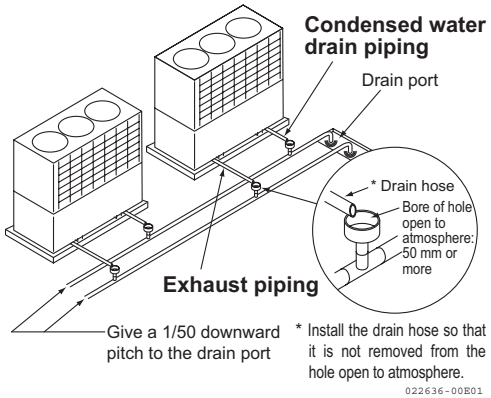

– 25 –

0FGHP-EN0801 DGJ002

7 Installing the Outdoor Unit

Fuel gas pipe

The piping to the outdoor unit should use metal pipes and have the following parts installed.

- **Use a white (zinc plated) pipe for the gas pipe.**
- **Use a reinforced gas hose (approved for gas) or low-pressure gas hose with a joint fixture for liquefied petroleum gas to link the fuel gas piping to the outdoor unit.**
- **As needed depending on the degree of contamination inside the fuel pipe due to piping work, install a strainer between the reinforced gas hose and the cock.**
- **The outdoor unit, particularly when installed on a vibration-proof stand, shakes a lot at start-up. Pay attention to where you lay out the reinforced gas hose.**
- **To seal the threads, use a liquid sealant such as Tight Seal. Do not use seal tape, which may get caught in the valve seat of the gas regulator, resulting in gas leak.**
- **After you have finished connecting the pipes, use soap solution to check the connections for leaks.**
- **The gas supply pressure at the outdoor unit inlet should be adjusted to meet the conditions specified in the table below.**

(Unit: kPa)

	Natural gas
Max. gas pressure	2.5
Standard gas pressure	2.0
Min. gas pressure	1.7

- **When required by national or regional legislation, a low gas pressure switch has to be mounted in the safety loop.**
- **Installation must comply to local and national standards or legislation.**

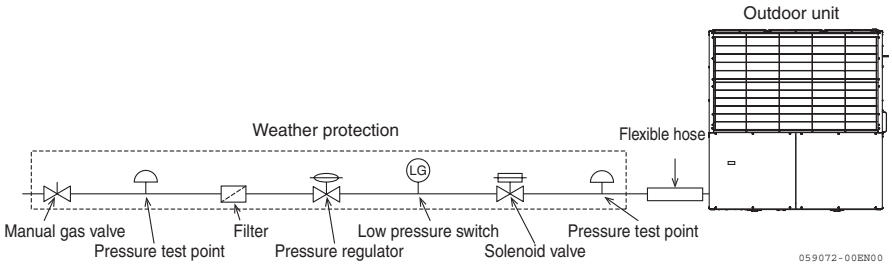

Recharging refrigerant

■ Amount of recharged refrigerant

- **The amount of recharged refrigerant (R) is calculated based on the fluid pipe sizes and lengths (actual lengths) of the extended piping.**
- **Use the formula below to calculate the amount of recharged refrigerant, and recharge that amount of refrigerant.**
- **The value of R should be rounded off in units of 0.1 kg.**

$$R=\left\{\left(\text{Total length of ø 19.1 fluid pipes [m]}\right)\times 0.25+\left(\text{Total length of ø 15.9 fluid pipes [m]}\right)\times 0.17+\left(\text{Total length of ø 12.7 fluid pipes [m]}\right)\times 0.11+\left(\text{Total length of ø 9.5 fluid pipes [m]}\right)\times 0.054+\left(\text{Total length of ø 6.4 fluid pipes [m]}\right)\times 0.022\right\}\times 1.15+\left(\text{Correction amount (value shown in table below)}\right)$$

Outdoor unit capacity	GYEQ20AN	GYEQ30AN
Refrigerant correction amount	6.4 kg	13.9 kg

⚠CAUTION **R410A must be charged as liquid refrigerant.**

CAUTION

- **Recording the filled refrigerant amount**
  When you refill the chlorofluorocarbon refrigerant, record the type and quantity of the chlorofluorocarbon on the sticker attached above the stop valve on the outdoor unit's terminal box cover. Use an oil-based marker or similar.

- **Since the outdoor unit is shipped with 11.8 kg of refrigerant already charged, the amount of recharged refrigerant should be carefully determined at the site (using the formula described above).**

■ Additional refrigerant charging

⚠CAUTION **Be sure to follow the below-mentioned procedure for additional refrigerant charging. Charging with the wrong procedure will cause damage to the compressor.**

- **Turn on the power supply for the indoor, outdoor, and BS units, and confirm signal transmission for the indoor and outdoor units. (When (BACK) located next to the hour meter on the outdoor unit circuit board is held down, the number of connected indoor units is displayed on the right side of the hour meter. If it matches the actual number of connected indoor units, the communication is established.)**
- **Make sure that the evacuation is completed. With all the closing valves "closed", connect a refrigerant cylinder to the fluid side closing valve service port using a charging hose. When connecting the refrigerant cylinder, take care to prevent air from entering the charging hose. When removing the charging hose, be sure to use the control valve to prevent the refrigerant from being discharged.**
- **With all electronic expansion valves closed, charge the refrigerant liquid from the liquid side closing valve service port. Do not perform charging from the gas side.**
- **When the refrigerant is charged from the gas side closing valve by mistake or the refrigerant is charged prior to confirming signal transmission for the indoor and outdoor units, recover the refrigerant from the both suction gas and discharge gas side closing valve and perform charging of the recovered volume from the fluid side closing valve.**
  When the refrigerant cannot be recovered, be sure to contact your trial run operator.
- **When charging of the specified volume of additional refrigerant is completed, remove the charge hose.**
  Note: If the specified volume of refrigerant cannot be charged, charge the remaining volume of refrigerant by following "Additional Refrigerant Charging Mode". Before doing this, it is necessary to wait for six hours after turning on the power for the outdoor unit.

Additional Refrigerant Charging Mode

* When the Additional Refrigerant Charging Mode is used, both the indoor and outdoor units should be operating.

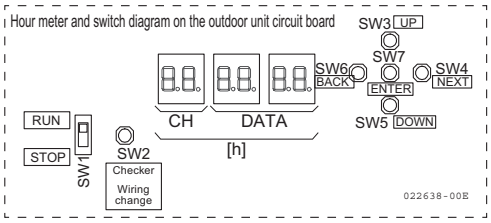

- **Turn on the power for the indoor, outdoor, and BS units and confirm signal transmission.**
- **With the fluid side closing valve "closed," open the both suction gas and discharge gas side closing valve only.**
- **Perform the following procedure using the switches located below the hour meter on the outdoor unit circuit board.**
  Note that some switches are disabled when approximately 10 minutes have passed after turning on the unit or after the previous operation. If this is the case, you can re-enable the switches by pressing and releasing SW2 (Rewire Checker). (In this case, do not hold down SW2 for 3 seconds or longer. Doing so would result in wiring change.)
  (1) Press (NEXT) and then press (UP) to set the blinking hour meter display to "2".
  (2) Press (NEXT) and then press (UP) to set the blinking hour meter display to "14".
  (3) Press (NEXT) and then press (UP) to set the blinking hour meter display to ON.
  (4) Press (ENTER) and the engine will start up, initiating the Additional Refrigerant Charging Mode.
- **Charge the refrigerant from the fluid side closing valve service port. Do not charge from the gas side.**
- **After charging of the specified volume is completed, perform the following procedure to terminate the Additional Refrigerant Charging Mode.**
  (1) Press (ENTER) and press (DOWN) to change the hour meter flickering display to [OFF]. Then press (ENTER). (The engine stops.)
  The operation will stop automatically after a maximum of 30 minutes. If charging cannot be completed within 30 minutes, charge refrigerant again using "Additional Refrigerant Charging Mode." In this case, a power reset is required for both indoor and outdoor units.
- **After additional refrigerant charging is completed, remove the charge hose and then close the both suction gas and discharge gas side closing valves. After this, ensure that the outdoor unit power is turned off.**

7 Installing the Outdoor Unit

Checklist for the completion of work

- **Confirm the following contents after the completion of work and adjust if required.**

Check	Content
☐	The outdoor unit is installed outside the building.
☐	The installation location of the outdoor unit does not resemble an indoor location, e.g. a balcony surrounded by ventilation louvers.
☐	The indoor and outdoor units are installed in locations capable of supporting their weight.
☐	An appropriate distance is maintained between the outdoor unit and flammable materials.
☐	The outdoor unit is installed so that exhaust gas from the unit does not leak into the building interior through windows, intake and exhaust vents, piping leading to its interior, air vents, etc.
☐	The indoor and outdoor units are not installed in locations where flammable gas may be generated, flow in, build up, or leak, or where volatile flammable items may be handled.
☐	Separate pipes are used for outdoor unit exhaust drain and for indoor unit drain.
☐	The exhaust drain hose of the outdoor unit is securely installed to the destination.
☐	The air inlet, exhaust outlet, and exhaust drain outlet of the outdoor unit are not blocked.
☐	If you plan to discharge the outdoor unit exhaust drain into a drain container or ditch with a lid or to discharge both the outdoor unit exhaust drain and indoor unit drain into the same place, the piping is configured so that the exhaust gas contained in the exhaust drain is emitted into the atmosphere.
☐	Rigid PVC drain pipes are used for the exhaust drain piping of the outdoor unit.
☐	Drains flow smoothly.
☐	Gas leak test for the fuel gas piping performed.
☐	A reinforced gas hose is used for the fuel gas piping between the gas cock in front of the outdoor unit and the outdoor unit.
☐	White pipes (chrome plated steel pipes) are used for the fuel gas piping.
☐	The outdoor unit, when installed on a vibration proof stand, shakes a lot at start-up. The reinforced gas hose is laid out carefully.
☐	The fuel gas type recorded on the outdoor unit and the gas type actually used are the same.
☐	The pressure of the fuel gas is within the prescribed limit.
☐	When installing the outdoor unit on the rooftop or at high elevations, provide a ladder and handrails in the passage as well as fences and handrails around the unit in order to prevent falls.
☐	The outdoor unit is securely fixed on a firm and level foundation using externally threaded mechanical anchor bolts (M12), or anchor bolts with more than short-term load handling capacity.
☐	The prescribed spaces are maintained for the ambient conditions in which the indoor and outdoor units are installed.
☐	The outdoor unit is not installed in a location where air or exhaust gas may blow against the windows and garden plants of neighboring buildings when the unit is operating.
☐	In areas that have strong winds, install the product so that the fan on the outdoor unit does not face the wind, or take measures in advance to protect against the wind.
☐	In areas that have snowfall in winter, take measures to protect the product from snow.
☐	The external filter (standard accessory) is installed correctly.
☐	Nitrogen gas was supplied when brazing the refrigerant piping.
☐	The refrigerant piping has been fully evacuated.
☐	Additional refrigerant has been charged in accordance with the length of the piping. The volume of the refrigerant has been recorded. (kg)
☐	The refrigerant does not leak from the piping.
☐	Additional refrigerant was charged using the procedure listed in the manual.
☐	When installing the indoor unit, measures are taken to prevent the refrigerant gas concentration from reaching a dangerous level even if a gas leak occurs.

- **To installers**

(1) Explain the safety cautions to the customer.

(2) After the completion of installation work, give this manual to the customer.

9. Wiring Manual

Table of Contents

1. Safety Precautions 1

2. Wiring Connection and Capacity..... 2

- Selection of Wiring and Breakers..... 2
- Wiring Connection 3
- Sequential Startup 5

3. Setting and Rewiring the Outdoor Unit 6

- Configuring the Outdoor Unit DIP Switches 6
- Wiring Change 8
- Checklist for the Completion of Work 9

Please be sure to refer to the attached Installation and Piping Work and Test Run Manuals for important additional information.
Also, refer to the Work Manuals for indoor units.

Two types of precautions are provided in this work manual: "⚠WARNING" and "⚠CAUTION". Please be sure to obey both types of precautions as they include important information for operational safety. These precautions are shown and described as follows:

⚠ **WARNING**	**Failure to follow this warning may result in serious injury or death.**
⚠ **CAUTION**	**Failure to obey this safety message or pay the necessary attention may result in injury or serious damage to the product.**

0FGHP-EN0821 DGJ002

1 Safety Precautions

■ Precautions for Electrical Wiring Work

⚠WARNING

- **Electrical work must be performed by qualified personnel with knowledge (certification) of electrical work in accordance with the regulations and standards (laws) related to electrical equipment and work and the installation (work) manual. Be sure to observe the capacity of the rated power supply, breaker, and switch, and cable specifications, and do the grounding wire (earthing) work. Erroneous work can result in electric shock, fire and other dangers.**
- **The electrical wiring must be in accordance with the power supply specifications of the gas heat pump air conditioning unit.**
- **Power must be supplied via a dedicated branch circuit. Sharing the circuit with other electric equipment will result in secondary damage due to breaker tripping.**
- **Use the specified cables (wire type/thickness) for electrical work. The cables should be perfectly connected to the appropriate connectors and fastened tightly so that the connecting terminals will not be exposed to external forces via the cables. Incomplete connection or fastening may cause heat or fires.**

⚠CAUTION

- **Be sure to install devices with a configured capacity to the upstream electric circuit of the power supply wiring in the order of leak circuit breaker and isolating switch (with fuse) or wiring breaker. Failure to install them may cause fire or electric shock.**
- **Be sure to do the earthing work. Earthing terminals are located near the terminal block of the outdoor unit. An imperfect ground connection can result in an electric shock.**
  Be sure to do the earthing work when installing the unit in order to prevent electrostatic charge and interference.
- **Fix the power supply wiring and transmission wiring with the clamps provided inside the unit so that the wiring does not touch the following parts:**
  (1) Moving parts and parts that generate high temperatures (e.g. engine, motor)
  (2) Refrigerant circuit (e.g. refrigerant piping, small pressure-relief tubes)
  (3) Pointed parts of metal fixtures.
- **Be sure to install an isolating switch (with fuse) or wiring circuit breaker with the configured capacity to each unit. Installing a breaker with inappropriate capacity may cause fire due to overheating or short circuit.**
- **Indoor and outdoor units may produce interference to AM radio reception. Install indoor and outdoor units and lay wiring at a safe distance from TVs, radios, audio equipment and PCs. Refer to the figure on the right. (Maintain a distance of 3 m or more, especially in areas with weak reception. Pass wiring through the power supply and transmission wiring conduits, and ground the power supply conduit.)**

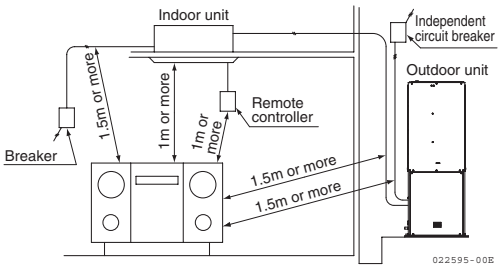

- **Do not route any transmission or signal cables alongside electrical voltage lines including power supply on the outside of the outdoor unit. If the above is unavoidable, establish a constant offset distance between the two cables (5 cm indoor units), or lay either cable through a metal conduit that is grounded at one end.**
- **Do not route any transmission or signal cables with other transmission or signal cables on the outside of the outdoor unit. If the above is unavoidable, establish a constant offset distance between the two cables (5 cm indoor units), or lay cables separately through a special metal conduit that is grounded at one end by transmission system.**
- **Do not add extension cables halfway between link cables or power supply cables. Doing so is dangerous.**
- **Do not remove too much cord coating when connecting a wire to a terminal. If the bare wire is too long, it can cause electric leaks and shocks.**
- **Installation must be according to local and national standards or legislation.**

2. Wiring Connection and Capacity

2 Wiring Connection and Capacity

Selection of Wiring and Breakers

⚠CAUTION
- **There are a variety of wiring methods for branch circuits. Select the appropriate wiring size, breaker, etc. in accordance with "Technical Standards for Electrical Equipment" and "Internal Wiring Rules".**
- **Do not use single-core wires. They can cause incomplete contact or damage to the terminal block.**

■ Wiring

- **The minimum wire diameter for power supply specifications and wiring specifications (power supply wiring, communication wiring, and remote control wiring) is listed in the table below.**

Type		Power supply					communication	Remote controller
		Power supply			Maximum current	Wire diameter *1	Wire diameter *2	Wire diameter *3
		Phase	Voltage	Frequency	At starting			
		-	V	Hz	A	mm²	mm²	mm²
Indoor unit		ø1	220~240	50	-	2.5	0.75	0.75
Outdoor unit	GYEQ20AN	ø1	200	50	24	2.5	0.75	0.75
	GYEQ30AN	ø1	200	50	30	2.5	0.75	0.75

* 1. Black VV cable (two-or three-core)
* 2. Sheathed vinyl cord or cable (two-core)
Maximum length: 1000 m or shorter (total extended length: 2000 m)
When using a shielded cable, be sure to ground only one end of the shielded cable. Do not ground both ends.
Maximum number of branches: 16 (no subbranches)
* 3. Sheathed vinyl cord or cable
Maximum length: 500 m
Indoor unit remote controller: two-core
• Ground: 2.5 mm² or more (ø1.6 mm) (copper)
Note: If exposed to the outside, use a black cable.

⚠CAUTION
- **The outdoor unit should only be connected with one indoor unit, which in turn should be crossover-connected to the other indoor units. (Unless a central control system is used, the addresses of the respective units are automatically configured and thus you do not have to manually configure them.)**

- **The link (communication) and remote control cables should be chosen from the following:**

Vinyl cabtyre round cord	VCTF	○
Insulated vinyl sheath cable for control use	CVV	○
Insulated vinyl sheath round cable for control use	CVS	○
Insulated vinyl sheath round cable	VVR	○
600 V vinyl cabtyre cable	VCT	○
Polyethylene insulated vinyl sheath cable	CPEV	○
Shielded stranded cable for instrumentation use	MVVS	○

Note: When using a shielded cable, be sure to ground only one end of the shielded cable. Do not ground both ends.

Fig. 1 Indoor unit terminal block

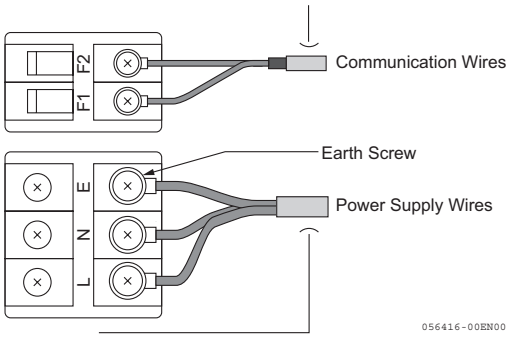

■ Breaker

	When using an isolating switch		When using a wiring circuit breaker Rated current (A)	Power supply cable (mm²)	When using an earth leakage circuit breaker	Grounding wire (copper) (mm²)
	Switch capacity (A)	Fuse capacity (A)				
Outdoor unit	30	20	20	See the table below.	20 A, 30 mA, 0.1 sec or less	2 or more (ø 1.6 mm or more)
BS unit	30	15	15	2 or more	15 A, 30 mA, 0.1 sec or less	2 or more (ø 1.6 mm or more)
Indoor unit (note)	30	15	15	2 or more	15 A, 30 mA, 0.1 sec or less	2 or more (ø 1.6 mm or more)

Note: Requirements may differ depending on the type, number, and capacities of the indoor units you are going to connect. For more information, see the indoor unit installation manual.

- **Power supply cable**

Outdoor unit capacity	The minimum wire diameter for power supply specifications	Power supply cable (mm²) Line length			
		less than 25m	less than 50m	less than 75m	less than 100m
GYEQ20AN	Single phase	3.5	8	14	14
GYEQ30AN	Single phase	2	5.5	8	14

2. Wiring Connection and Capacity

Wiring Connection

■ About power supply wiring

- **Use specified cables for wiring work. The cables should be perfectly connected to the appropriate connectors and fastened tightly so that the terminal connectors will not be exposed to external forces via the cables.**
- **Be sure to install a ground-fault circuit breaker designed specifically for use with air conditioners.**
- **Do not use single-core cables, which can cause incomplete contact or damage to the terminal block.**
- **Do not use a "cord" for power supply wiring.**
  Example: You cannot use a VCTF cord, but you can use a VV cable.
- **Both outdoor and indoor units should be grounded.**
- **Power must be supplied via a dedicated branch circuit.**
- **For indoor unit power supply wiring, you cannot connect two different-diameter cables to the power supply terminal block. (Should such two cables be connected, they would likely loosen during use, possibly resulting in abnormal heat generation.) See the figure below.**

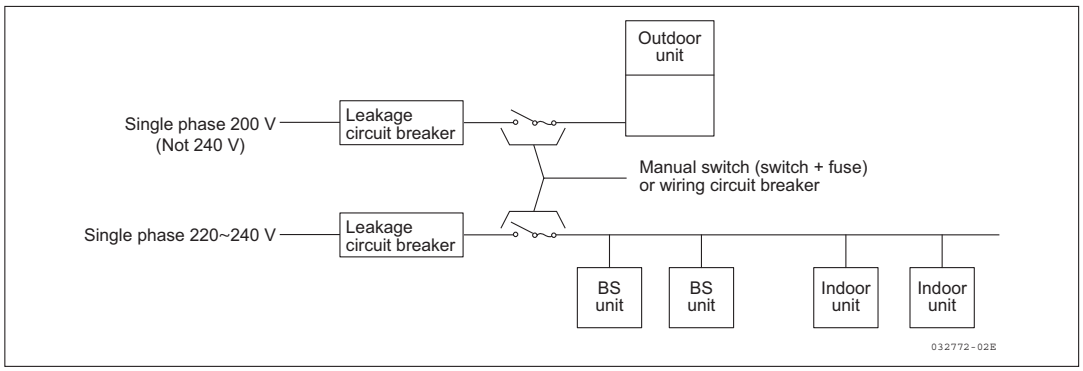

- **Connecting the single phase 200 V power supply cable**

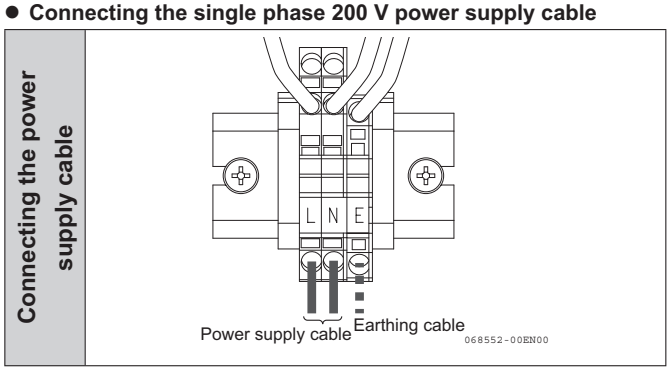

- **Be sure to do all grounding work. At installation time, you must perform grounding work to prevent electrostatic charge and interference.**
- **The maximum connectable size of the terminal block is 6 mm², but some types of cables may not apply.**

2. Wiring Connection and Capacity

■ Guidelines on link (communication) and remote control cables

- **Never connect the terminal block for link (communication) cables with a power supply (e.g. 200 V or 240 V). Doing so would break the entire system.**
- **Link (communication) cables should be laid away from power supply cables so that they will not be exposed to electric interference.**
- **Never connect two or more indoor units/remote controllers using the same cable with 3 or more cores because doing so would result in abnormal stops.**
- **Remote control cables and link (communication) cables between outdoor and indoor units should neither be laid through the same conduit as a power supply cable or laid close to each other.**
- **Never use a cable with 3 or more cores as a link (communication) cable.**

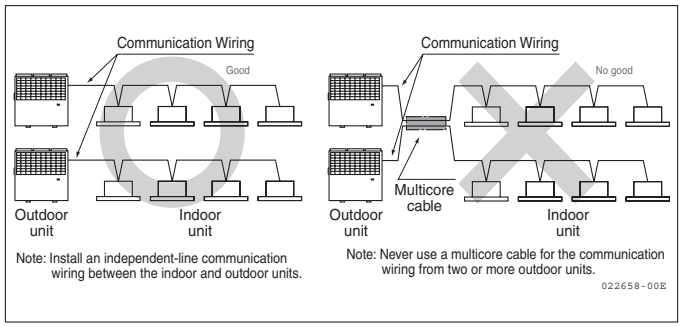

- **As far as practicable, avoid laying a link (communication)/remote control cable parallel to electrical voltage lines including a power supply cable. If the above is unavoidable, establish a constant offset distance between the two cables, or lay either cable through a metal conduit that is grounded at one end. The offset distance should meet the requirements described below. If there is an applicable legal regulation, however, that regulation takes precedence.**
- **As far as practicable, avoid laying a link (communication)/remote control cable parallel to another link (communication)/remote control cable. If that is unavoidable, establish a constant offset distance between the two cables, or lay cables separately inside a special metal conduit that is grounded at one end by transmission system. The offset distance should meet the requirements described below. If there is an applicable legal regulation, however, that regulation takes precedence.**

[Offset distance]

If the power supply cable belongs to an outdoor unit, indoor unit, or DAIKIN air conditioning system, the offset distance should be 50 mm or greater.

If the power supply cable is a heavy power supply cable that belongs to some other unit or system, the offset distance should meet the requirements described in this table:

220 V or less/10 A or less	300 mm or more
220 V or less/50 A or less	500 mm or more
220 V or less/100 A or less	1000 mm or more
220 V or less/100 A or more	1500 mm or more

* These offset distance requirements apply when two cables are laid in parallel within the length of 100 mm.

2. Wiring Connection and Capacity

■ Wiring connection locations

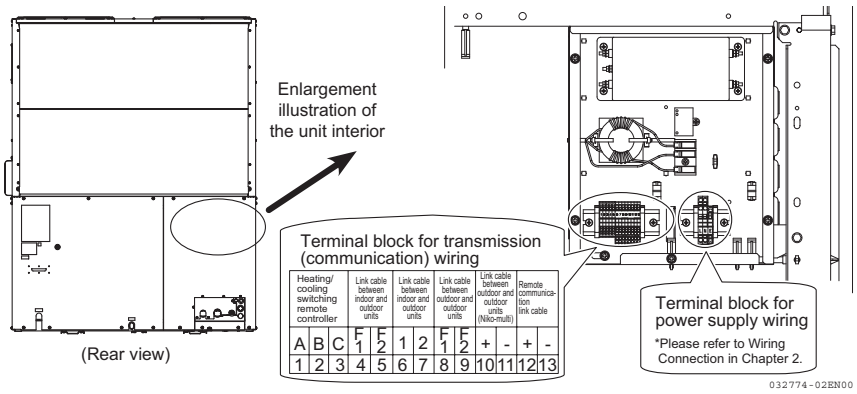

■ How to perform wiring work

Wiring example

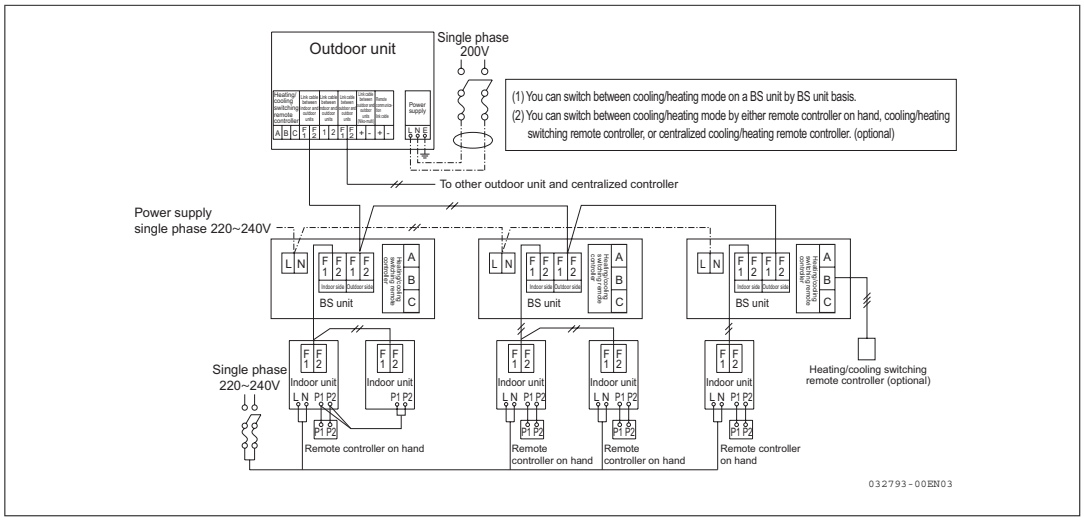

- **Precautions when making a crossover connection for a remote controller**

  Do not make a crossover connection for a remote controller across multiple BS units.

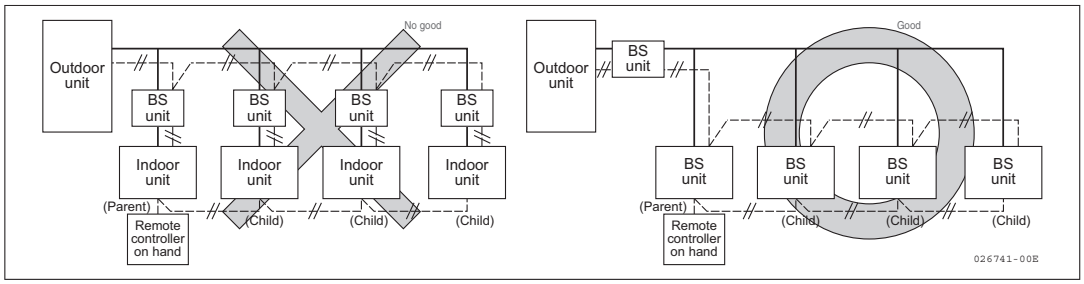

■ Follow the indoor unit work manual for the wiring connection on the indoor unit.

Sequential Startup

- **The startup of the outdoor units are sequential. After the system has confirmed the start of the first outdoor unit engine, it attempts to start the second outdoor unit, and so on.**

3. Setting and Rewiring the Outdoor Unit

Configuring the Outdoor Unit DIP Switches

⚠CAUTION

- **Before accessing the DIP switches, turn off the power and make sure that none of the LEDs on the circuit board are lit. Attempting to access the DIP switches with any LED lit could result in an electrical shock due to electricity remaining in the circuit.**

Be sure to check the DIP switch settings whether or not you want to change the factory default settings.
After changing any DIP switch setting or connector, you have to turn the power off and back on for the new setting to take effect.
When you want to reset the outdoor unit power supply, turn off the power and make sure that none of the LEDs on the circuit board are lit before turning back on the power. An attempt to reset the power supply with any LED lit may fail due to electricity remaining in the circuit.

■ Configuring the DIP switches on the main circuit board

- **Use the following tables to check/configure the DIP switches:**

Name	SW No.	Parameter	Description				Factory default	On-site configuration	Remarks
DSW1	1 – 2	Piping length (equivalent length)	1	2			1: off 2: off	Required	
			off	off	Piping length is 30 m or less.				
			on	off	Piping length is between 30 m and 80 m.				
			off	on	Piping length is between 80 m and 130 m.				
			on	on	Piping length is 130 m or more.				
	3 – 4	Heating temperature level	3	4			3: off 4: off	Configure when required.	
			off	off	Heating temperature level is set to "Standard".				
			on	off	Heating temperature level is set to "Low".				
			off	on	Heating temperature level is set to "High".				
			on	on	Heating temperature level is set to "Outdoor Air Temperature Processing".				
	5	Cooling/heating selection priority	on	Priority to the indoor unit (remote controller)			on	Configure when required.	Be sure to set the switch on.
			off	Priority to the outdoor unit					
	6 – 8	Fuel gas type	6	7	8		Factory default Depending on specification	Confirmation only	
			off	off	off	Natural gas			

3. Setting and Rewiring the Outdoor Unit

Name	SW No.	Parameter	Description						Factory default	On-site configuration	Remarks
DSW2	1	Aggregate/ independent control	on	Enables aggregate cooling/heating control.					off	Configure when required.	
			off	Enables independent cooling/heating control (standard setting).							
	2	Parent/child control	on	Enables aggregate cooling/heating control from the parent.					off	Configure when required.	
			off	Enables aggregate cooling/heating control (standard setting).							
	3 - 4	Centralized cooling/ heating No. setting	3	4					3: off 4: off	Configure when required.	
			off	off	Sets the centralized cooling/heating terminal number to "0".							
			off	on	Sets the centralized cooling/heating terminal number to "1".							
			on	off	Sets the centralized cooling/heating terminal number to "2".							
			on	on	Sets the centralized cooling/heating terminal number to "3".							
	5 - 7	D terminal address setting	5	6	7				5: off 6: off 7: off	Configure when required.	
			off	off	off	Sets the centralized cooling/heating terminal address to "0".						
			off	off	on	Sets the centralized cooling/heating terminal address to "1".						
			off	on	off	Sets the centralized cooling/heating terminal address to "2".						
			off	on	on	Sets the centralized cooling/heating terminal address to "3".						
			on	off	off	Sets the centralized cooling/heating terminal address to "4".						
			on	off	on	Sets the centralized cooling/heating terminal address to "5".						
			on	on	off	Sets the centralized cooling/heating terminal address to "6".						
			on	on	on	Sets the centralized cooling/heating terminal address to "7".						
	8	Not used	-						off	-	
DSW3	1 - 5	Remote supervision address settings	1	2	3	4	5		1: off 2: off 3: off 4: off 5: off	Configure when required.	
			off	off	off	off	off	Disabled (address not configured)			
			on	off	off	off	off	Address=1			
			off	on	off	off	off	Address=2			
			on	on	off	off	off	Address=3			
			off	off	on	off	off	Address=4			
			on	off	on	off	off	Address=5			
			off	on	on	off	off	Address=6			
			on	on	on	off	off	Address=7			
			off	off	off	on	off	Address=8			
			on	off	off	on	off	Address=9			
			off	on	off	on	off	Address=10			
			on	on	off	on	off	Address=11			
			off	off	on	on	off	Address=12			
			on	off	on	on	off	Address=13			
			off	on	on	on	off	Address=14			
			on	on	on	on	off	Address=15			
			off	off	off	off	on	Address=16			
	6	Not used	-	-					off	-	
			-	-							
	7	Not used	-	-					off	-	
			-	-							
	8	Not used	-	-					off	-	
DSW4	1	Not used	-	-					off	-	
	2	Not used	-	-					off	-	
DSW5	1	Not used	-	-					on	-	
			-	-							
	2	Not used	-	-					on	-	

– 7 –

0FGHP-EN0821 DGJ002

3. Setting and Rewiring the Outdoor Unit

◇ Main circuit board diagram

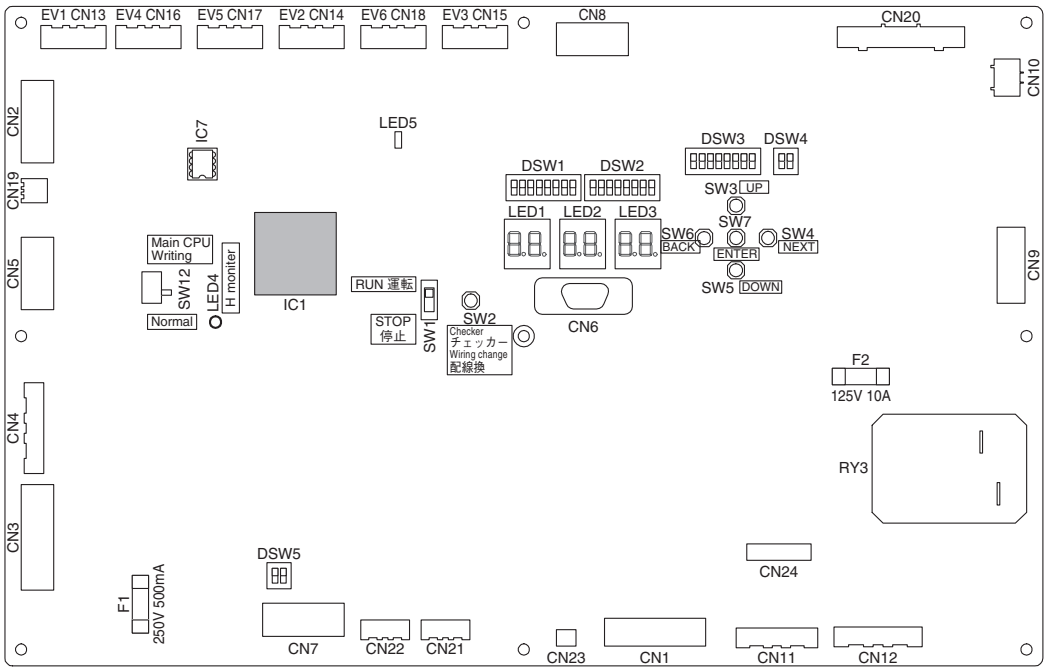

Note: The number of connectors, etc. will vary slightly depending on the model.

■ Configuring the switches on the BS unit

- **You have to configure these switches when you use a heating/cooling switching remote controller or centralized cooling/heating remote controller.**
- **Be sure to configure the switches before turning on the power. The settings are read by the microcomputer when the device is turned on.**
- **For more information on the settings, refer to the BS unit work instruction manual.**

Wiring Change

■ After you finish wiring work and outdoor unit configuration work, perform "Wiring change" by pressing and holding down SW2 on the main circuit board for at least 5 seconds with the power turned on prior to test run. Without "Wiring change," establishing the communication may fail.

Checklist for the Completion of Work

- **Confirm the following contents after the completion of work and adjust if required.**

Check	Item to confirm
☐	The electrical wiring uses a dedicated branch circuit that is not shared with other electric equipment. (The electrical wiring is an dedicated branch circuit.)
☐	An earth leakage circuit breaker, isolating switch (with fuse), or wiring circuit breaker with the appropriate capacity is used.
☐	Use specified cables (wire type/thickness) for electrical work. The cables should be perfectly connected to the appropriate connectors and fastened tightly so that the connecting terminals will not be exposed to external forces via the cables.
☐	The thickness of wiring is equal to, or greater than, the prescribed size.
☐	The power supply and voltage are the same as the specification shown on the units (identification plates).
☐	The earth wire is not connected to the earth wire of a telephone, gas pipe, water pipe or conductor rod.
☐	The earthing work has been done.

0FGHP-EN0821 DGJ002

10.Test Run Manual

Table of Contents

1 Safety Precautions 1

2 How to Perform a Test Run 2

- Checks Prior to the Test Run 2
- Checking the outdoor and indoor units 2
- Configuring the Outdoor Unit DIP Switches (Check) 3
- Wiring Change 5
- Test Run Procedure 6
- How to Use the PCB Checker 8
- Problems during Operation 18
- External Filter Clogging Judgment 21
- Confirmation after Operation 21

Please be sure to refer to the attached Installation and Piping Work and Electrical Work Manuals for important additional information.
Also, refer to the Work Manuals for indoor units.
The test run must be performed by service specialists.

Two types of notes are provided in this work manual: "⚠WARNING" and "⚠CAUTION". Please be sure to obey both notes as they include important information for operational safety. These precautions are shown and described as follows:

⚠WARNING	**Failure to follow this warning may result in serious injury or death.**
⚠CAUTION	**Failure to obey this safety message or pay the necessary attention may result in injury or serious damage to the product.**

0FGHP-EN0841 DGJ002

1 Safety Precautions

■ Notes on the Test Run

⚠WARNING

- **Check the type of gas.**
  Using the wrong type of gas will lead to incomplete fuel combustion and exhaust gas poisoning.

⚠CAUTION

- **By factory default, the power breaker in the outdoor unit is set to OFF. Turn on the power of the outdoor unit six hours before the test run.**
  (Failure to do so causes damage to the compressor.)
- **Bleed air from the fuel gas pipe.**
- **Be sure to open the gas cock before use. (If the remote controller or checker is turned on with the gas cock closed, it will cause damage to the starter motor and start-up transformer.)**
- **Only service specialists should handle and operate the PCB checker.**
  Handling by persons other than service specialists may result in malfunctions or electric shocks.
- **This machine is designed and manufactured especially for the R410A refrigerant.**
  If a different type of refrigerant other than the R410A refrigerant is used, mechanical fault, malfunction and failure may result, which could cause a serious safety hazard. Never fill any other refrigerants except the R410A refrigerant.
  The filled refrigerant type is recorded on the machine nameplate.
  DAIKIN is not responsible for any defects (including failures and malfunctions) and accidents caused by filling a refrigerant other than R410A.

- **Recording the filled refrigerant amount sticker**
  When you refill the chlorofluorocarbon refrigerant, record the type and quantity of the chlorofluorocarbon on the sticker attached above the stop valve on the outdoor unit's terminal box cover. Use an oil-based marker or similar.
- **Collecting the Refrigerant**
  Do not recklessly discharge Freon (chlorofluorocarbon) into the atmosphere.
  It is necessary to collect the Freon.

0FGHP-EN0841 DGJ002

2 How to Perform a Test Run

Checks Prior to the Test Run

All tools and instruments used to handle refrigerants and refrigerating machine oil during installation work should be dedicated to the specific refrigerant.

- **After you have finished wiring work and before the test run, perform "Wiring change" by pressing SW2 on the main PCB for at least 5 seconds with the power on. Without "Wiring change," establishing the communication may fail.**
- **To perform the cooling operation at the outdoor air temperature of 0 °C or lower, be sure to install AirGuard (optional order) and turn on the AirGuard setting of the memory switch.**
  For how to configure the memory switch, see "How to use the PCB checker, Stop mode, 3. Configure Items."
- **Check the installation.**

Checking the outdoor and indoor units

- **Check that the combination of the outdoor units and indoor units is correct.**

■ **Possible combinations** The following table shows the possible combinations with indoor units.

Model	GYEQ20AN	GYEQ30AN
Number of indoor units that can be connected	1-32 units	1-48 units
Number of indoor units that can be run concurrently	1-32 units	1-48 units
Capacity range of indoor units that can be connected	50-130%	

Note 1: When using a floor-mounted duct type indoor unit in conjunction with other indoor unit types, make sure that the total capacity of the indoor units does not exceed 100%.

BS Unit

Model	BSGQ100PV1	BSGQ160PV1	BSGQ250PV1
Total capacity range of indoor units that can be connected	Q ≤ 11.2 kW	11.2 < Q ≤ 18.0kW	18.0 < Q ≤ 28.0kW
Number of connectable indoor units	5 units or less	8 units or less	8 units or less

Note 1: If simultaneous operation is performed by a system in which the total capacity of the indoor units exceeds 100%, the capacity of each indoor unit may be slightly lower than rated.

Configuring the Outdoor Unit DIP Switches (Check)

⚠CAUTION

- **Before accessing the DIP switches, make sure that all of the LEDs on the PCB are off after the power source is turned off. Attempting to access the DIP switches with any LED lit can result in an electrical shock due to electricity remaining in the circuit.**

Be sure to check the DIP switch settings even if it is not necessary to change them from the factory default settings.
After changing any DIP switch setting or connector, you have to turn the power off and on again for the new setting to take effect.
When you want to reset the outdoor unit power supply, turn off the power and make sure that none of the LEDs on the PCB are lit before turning the power on again. An attempt to reset the power supply with a LED lit may fail due to electricity remaining in the circuit.

■ Configuring the DIP switches on the main circuit board

- **Use the following tables to check/configure the DIP switches.**

Name	SW No.	Parameter	Description				Factory default	On-site configuration	Remarks
DSW1	1 - 2	Piping length (equivalent length)	1	2			1: off 2: off	Required	
			off	off	Piping length is 30 m or less.				
			on	off	Piping length is between 30 m and 80 m.				
			off	on	Piping length is between 80 m and 130 m.				
			on	on	Piping length is 130 m or more.				
	3 - 4	Heating temperature level	3	4			3: off 4: off	Configure when required.	
			off	off	Heating temperature level is set to "Standard".				
			on	off	Heating temperature level is set to "Low".				
			off	on	Heating temperature level is set to "High".				
			on	on	Heating temperature level is set to "Outdoor Air Temperature Processing".				
	5	Cooling/heating selection priority	on	Priority to the indoor unit (remote controller)			on	Configure when required.	Be sure to set the switch on.
			off	Priority to the outdoor unit *					
	6 - 8	Fuel gas type	6	7	8		Determined by factory default	Confirmation only	
			off	off	off	Natural gas			

2 How to Perform a Test Run

Name	SW No.	Parameter	Description						Factory default	On-site configuration	Remarks
DSW2	1	Aggregate/ independent control	on	Enables aggregate cooling/heating control.					off	Configure when required.	
			off	Enables independent cooling/heating control (standard setting).							
	2	Parent/child control	on	Enables aggregate cooling/heating control from the parent.					off	Configure when required.	
			off	Enables aggregate cooling/heating control (standard setting).							
	3 - 4	Centralized cooling/ heating No. setting	3	4					3: off 4: off	Configure when required.	
			off	off	Sets the centralized cooling/heating terminal number to "0".							
			off	on	Sets the centralized cooling/heating terminal number to "1".							
			on	off	Sets the centralized cooling/heating terminal number to "2".							
			on	on	Sets the centralized cooling/heating terminal number to "3".							
	5 - 7	D terminal address setting	5	6	7				5: off 6: off 7: off	Configure when required.	
			off	off	off	Sets the centralized cooling/heating terminal address to "0".						
			off	off	on	Sets the centralized cooling/heating terminal address to "1".						
			off	on	off	Sets the centralized cooling/heating terminal address to "2".						
			off	on	on	Sets the centralized cooling/heating terminal address to "3".						
			on	off	off	Sets the centralized cooling/heating terminal address to "4".						
			on	off	on	Sets the centralized cooling/heating terminal address to "5".						
			on	on	off	Sets the centralized cooling/heating terminal address to "6".						
			on	on	on	Sets the centralized cooling/heating terminal address to "7".						
	8	Not used	-						off	-	
DSW3	1 - 5	Remote supervision address settings	1	2	3	4	5		1: off 2: off 3: off 4: off 5: off	Configure when required.	
			off	off	off	off	off	Disabled (address not configured)			
			on	off	off	off	off	Address=1			
			off	on	off	off	off	Address=2			
			on	on	off	off	off	Address=3			
			off	off	on	off	off	Address=4			
			on	off	on	off	off	Address=5			
			off	on	on	off	off	Address=6			
			on	on	on	off	off	Address=7			
			off	off	off	on	off	Address=8			
			on	off	off	on	off	Address=9			
			off	on	off	on	off	Address=10			
			on	on	off	on	off	Address=11			
			off	off	on	on	off	Address=12			
			on	off	on	on	off	Address=13			
			off	on	on	on	off	Address=14			
			on	on	on	on	off	Address=15			
			off	off	off	off	on	Address=16			
	6	Not used	-	-					off	-	
			-	-							
	7	Not used	-	-					off	-	
			-	-							
	8	Not used	-	-					off	-	
DSW4	1	Not used	-	-					off	-	
	2	Not used	-	-					off	-	
DSW5	1	Not used	-	-					on	-	
			-	-							
	2	Not used	-	-					on	-	

– 4 –

0FGHP-EN0841 DGJ002

2 How to Perform a Test Run

◇ **Main circuit board diagram**

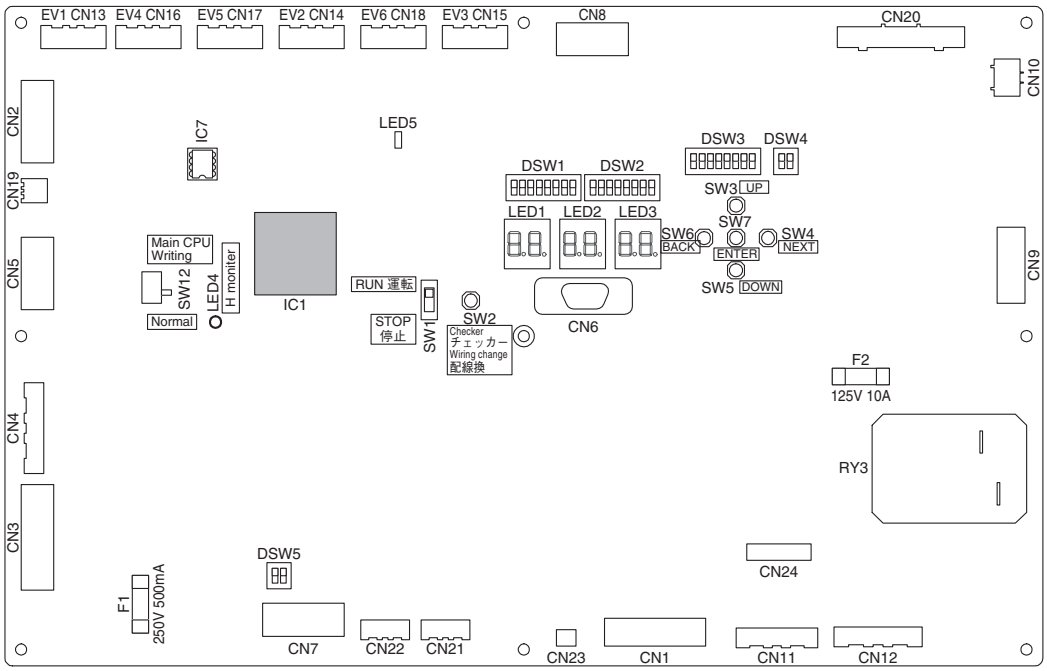

Note: The number of connectors, etc. will vary slightly depending on the model.

■ Configuring the switches on the BS unit

- **You have to configure these switches when you use a heating/cooling switching remote controller or centralized cooling/heating remote controller.**
- **Be sure to configure the switches before turning on the power. The settings are read by the microcomputer when the device is turned on.**
- **For more information on the settings, refer to the BS unit work instruction manual.**

Wiring Change

■ After you finish wiring work and outdoor unit configuration work, perform "Wiring change" by pressing and holding down SW2 on the main PCB for at least 5 seconds with the power turned on prior to test run. Without "Wiring change," establishing the communication may fail.

2 How to Perform a Test Run

Test Run Procedure

After the completion of the installation, piping and wiring works, implement the test run according to the procedure below.

(1) Confirm this prior to the test run. (Review the installation and test run check sheets attached.)

(2) Verify that the outdoor, indoor, and BS units have been correctly configured.

(3) Turn on the power for the indoor, outdoor, and BS units, confirm transmission signal for indoor and outdoor units and open the fuel gas cock. (For the test run, more than 6 hours of energizing is required for the outdoor unit.)

(4) Use the PCB checker on the main PCB of the outdoor unit and check the operation of the actuator. Refer to "How to use the PCB checker". or Connect the PC checker to the main PCB of the outdoor unit and check the operation of the actuator.

(5) ⚠CAUTION Confirm the filling method of the additionally filled refrigerant. The test run procedures vary according to the filling method. Make sure that more than six hours have elapsed after energizing. Otherwise the compressor may be damaged.

(6) The refrigerant has been filled as indicated in the installation and piping manual. / The refrigerant has been filled by other methods than indicated in the installation and piping manual. Or the filling method is not known. (Unknown)

(7) Fully open the stop valves of outdoor unit on both liquid and gas (intake and discharge) sides. Install the accessory stoppers to the stop valves. (GYEQ20AN valves are intake gas side stop valves; GYEQ30AN only the stop valves on the discharge gas side) / When both intake and discharge stop valves are closed / When the gas stop valves (intake and discharge) are opened

(8) Leave for more than 24 hours after the power has been turned on. (This is to maintain the heater welding time.)

(9) Open the liquid side stop valve only. / Close the gas stop valves (intake and discharge). (The liquid side stop valve opens.)

(10) Go into the "Refrigerant Misfilling Emergency Mode". Refer to the next page.

(11) The test run should start with the cooling operation, then change to the heating operation. *

(12) The test run should be implemented during normal operation (the total operated hours should be displayed on the hour meter; however, when connecting the PC checker, "Option" should be displayed), check each function and measure operation data to confirm normal operation. (Checked items should be recorded in accordance with the test run check sheet attached. Data obtained via the PC checker should be added to the check sheet.)

* When unable to operate the system due to indoor and outdoor temperature condition, do a test run by setting the remote controller to test run mode and the outdoor unit to the checker mode. To set the checker mode of the outdoor unit, turn on the checker mode on the PC checker or the PCB checker.
Refer to "How to use the PCB checker, Run mode, 2. Special operation". During the test run, set the airflow volume of the indoor unit to the maximum.

CAUTION: Operation may not be possible for 30 minutes after powering the unit.
When entering the cooling operation after refrigerant refilling or heating operation, the unit operates for approximately 10 minutes in protection mode after starting. The operation may be stopped automatically, but the unit will also switch back to normal operation automatically.

2 How to Perform a Test Run

■ Refrigerant Misfilling Emergency Mode

- **Perform the following procedure using the switches located next to the hour meter on the outdoor unit PCB.**
  Switch operation may not be possible for approximately 10 minutes after the unit is turned on or the last operations. If operation is not possible, press "SW2 checker wiring change" once to enable operation. (Do not hold down SW2 for 3 seconds or longer. Doing so can result in wiring change.)
  (1) Press (NEXT) and then press (UP) to set the blinking hour meter display to "2".
  (2) Press (NEXT) and then press (UP) to set the blinking hour meter display to "11".
  (3) Press (NEXT) and then press (UP) to set the blinking hour meter display to "ON".
  (4) Press (ENTER) and the engine will start up, initiating the Refrigerant Misfilling Emergency Mode.
  (5) If LED5 (green) on the PCB flashes four times, open the discharge gas side closing valve. After opening the stop valve, press (ENTER). The LED5 (green) flashes once or twice. (If LED5 (green) still flashes four times, (ENTER) is probably not recognized. In this case, press (ENTER) again.)

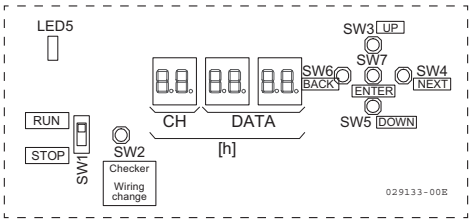

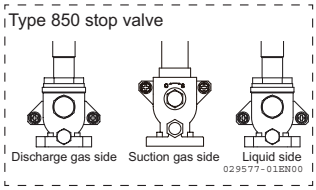

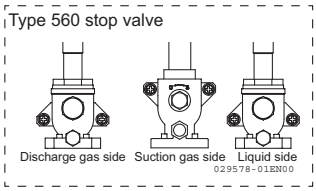

- **In case of normal completion, the engine stops and LED5 (green) on the PCB flashes three times.**
  In the case of abnormal completion, the engine stops and LED5 (green) on the PCB is continuously lit.
  In the case of abnormal completion, press (BACK) to return to the state before setting to identify the failure on the hour meter. Then deal with the failure. After correcting the error, reset the power supply *, close the discharge gas side stop valve, and then perform the Refrigerant Misfilling Emergency Mode again.
- **After the normal completion, open the stop valve on the discharge gas side. After that, reset the power supply * and continue the test run procedure after confirming signal transmission for indoor and outdoor units.**

* Turn off the outdoor unit's breaker. After confirming that none of the LEDs on the PCB are lit, turn on the breaker to complete the reset.

CAUTION: When starting after the power supply reset, the units operates in protection mode for approximately 10 minutes. The operation may be stopped automatically, but the unit will also switch back to normal operation automatically.

2 How to Perform a Test Run

How to Use the PCB Checker

⚠CAUTION

- **Wipe soil, oil and water from your hands before operating pushbuttons and switches on the PCB. Oil and water may cause electric shocks or the PCB to malfunction.**
- **Be sure to operate pushbuttons with your hands, not with a ballpoint pen or other tools. Failure to do so will cause the PCB to malfunction.**

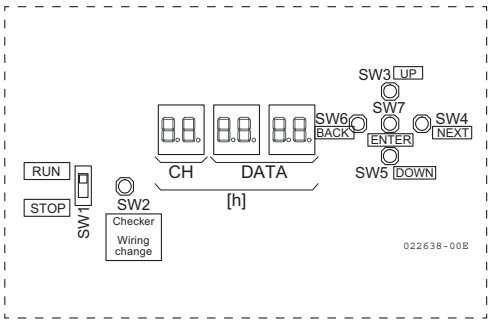

⚠CAUTION

- **The unit goes into sleep mode 10 minutes it was turned on or operated. In that case, the PCB checker is not operational. If operation is not possible (due to sleep mode), press "SW2 checker wiring change" once to release the sleep mode and enable operation. (If SW2 is pressed continuously, the wiring change operation is activated.)**

Hour Meter / Error Code Display

- **The hour meter (7-segment meter) on the PCB displays the total operated hours time during normal operation. When an error or fault occurs, the total operated hours and error code are displayed alternately and repeatedly at one second intervals.**

□ Example of hour meter display

1) When operating for 8238 hours

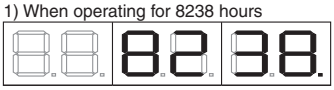

2) When malfunction code E1 occurs

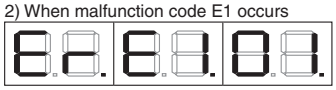

022711-00E

- **When the total operated hours are displayed:** Holding down the (UP) button (for 3 seconds) displays the main CPU software version.
  Holding down the (UP) button (for 3 seconds or longer)…displays the EEPROM serial number.
  Holding down the (DOWN) button (for 3 seconds) displays the DCBL software version.
  Holding down the (DOWN) button (for 3 seconds or longer)…displays the Ignition CPU software version.
  Holding down the (BACK) button (for 3 seconds) displays the model. (The type is displayed by a two-letter code as shown below.)

display	AF

  Holding down the (BACK) button (for 3 seconds or longer) displays the status of communication with the indoor units and the number of connected indoor units.
  Holding down the (ENTER) button (for 3 seconds or longer) clears the alarm condition.
  (NEXT): Pressing this button activates the RUN mode.
- **Communication status display available**
  The dot in the 6th digit (far left) indicates the status of communication with the indoor units and flashes once when the connection is established.

2 How to Perform a Test Run

How to Use the PCB Checker

- **You can use the PCB switch SW1 to switch the checker function between the RUN and STOP modes.**

□ SW1 and pushbutton functions

Button name	Function
UP	Selects a different channel (CH)
DOWN	Selects a different channel (CH)
NEXT	Moves to the next level
BACK	Returns to the previous level
ENTER	Saves settings (moves to the next menu)
ENTER (hold down)	Clears/Changes the settings to adjustable
SW1	Switches between RUN and STOP modes

RUN Mode

- **When pressing NEXT or ENTER (hereafter shown NEXT as only) button while SW 1 is in the RUN position and the total operated hours are displayed, RUN mode starts. (The display shows "1._____")**
- **To leave the RUN mode, press the BACK button repeatedly until the total operated hours are displayed. (Caution: Be sure to obey the above instructions when terminating the RUN mode.)**
- **The RUN mode has four levels from 1 to 4. Use the BACK and NEXT buttons to switch between these levels.**
- **The channels are shifted using UP and DOWN buttons.**

	Level 1	Level 2	Level 3	Level 4
CH items	1. Outdoor unit	01. Outdoor unit data	Outdoor unit data display	
		02. Actuator operation status 1	Actuator operation status 1 display	
		03. Actuator operation status 2	Actuator operation status 2 display	
		04. Unused		
		05. Unused		
	2. Special operation	Special operation mode	Special operation mode setting	
	3. Indoor unit	01. Indoor unit detailed information	Indoor unit No.	Indoor unit information display
		02. Indoor unit thermostat ON	Indoor unit thermostat ON status display	
		03. Indoor unit remote controller ON	Indoor unit remote controller ON status display	
	4. Item display	01. ON/OFF Unit (Memory Switch)	Each item	ON/OFF display
		02. Data Units	Item display	

* While in RUN mode, the display is automatically released from the checker five hours after the termination of the operation, and it returns to the total operated hours displays.

2 How to Perform a Test Run

1. Outdoor unit

1-1. Outdoor Unit Data Display

(1) Enter RUN mode, select CH [1] at Level 1 and press NEXT. (2) Select CH [01] at Level 2 and press NEXT. (3) When selecting the CH (refer to the table below) of the desired data at Level 3, the data is displayed.

□ **Table 1: List of outdoor unit data**

CH	Item	Content	CH	Item	Content
01	Current speed	min^{-1}	35	PCB temperature	°C
02	Target speed	min^{-1}	36	Not used	
03	Set speed	min^{-1}	37	Vacant	
04	Throttle valve	Pulse	38	Vacant	
05	Fuel control valve	Pulse	39	Not used	
06	Mode flag	4th digit: 0: normal mode, 1: checker mode	40	Vacant	
		3rd digit: 0: stop, 1: operation	41	Not used	
		2nd digit: 0: blowing, H: heating, C: cooling	42	Not used	
		1st digit: 0: auto, 2: manual	43	Not used	
07	EV1	Pulse	44	SHS1	°C
08	EV2	Pulse	45	SHS2	°C
09	EV3	Pulse	46	SHS3	°C
10	EV4	Pulse	47	SHS4	°C
11	EV5	Pulse	48	SHD1	°C
12	EV6	Pulse	49	SHD2	°C
13	Water Motor Valve	Pulse	50	SHO1	°C
14	Fan 1	min^{-1}	51	SHO2	°C
15	Fan 2	min^{-1}	52	Vacant	
16	Fan 3	min^{-1}	53	High-pressure converted temperature 1	°C
17	Cooling water pump	min^{-1}	54	Vacant	
18	Cooling water temperature	°C	55	Low-pressure converted temperature	°C
19	High pressure side 1	MPa	56~59	Not used	
20	Low pressure side	MPa	60	Receiver temperature 31	°C
21	Outdoor air temperature	°C	61	Vacant	
22	Exhaust temperature	°C	62	Oil temperature 3	°C
23	Discharge temperature 1	°C	63	Oil temperature 4	°C
24	Discharge temperature 2	°C	64	Vacant	
25	Intake temperature 1	°C	65	SHS5	°C
26	Intake temperature 2	°C	66	SHO3	°C
27	Intake temperature 3	°C	67	SHO4	°C
28	Intake temperature 4	°C	68	Vacant	
29	Oil temperature 1	°C	69	High pressure side 2	MPa
30	Oil temperature 2	°C	70	High pressure side 3	MPa
31	Vacant		71	High pressure side 4	MPa
32	Vacant		72	EV3A	Pulse
33	Vacant		73	EV3B	Pulse
34	Vacant		74	EV7	Pulse

□ **Figure 1: Content of outdoor unit segment display**

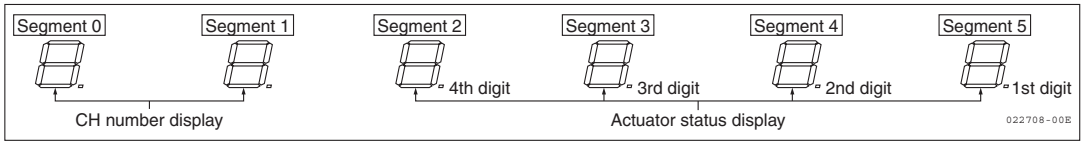

– 10 –

0FGHP-EN0841 DGJ002

2 How to Perform a Test Run

1-2. Actuator Operation Status Display

(1) Enter RUN mode, select CH [1] at level 1 and press NEXT. (2) Select CH [02] or [03] at Level 2 and press NEXT. (3) When selecting the CH (refer to the table below) of the desired data at level 3, the operation status is displayed.

□ **Table 2: List of actuator operation status 1. Select CH [02] at Level 2**

CH	No.	Content	CH	No.	Content
01	1	High-pressure SW1/SW2	04	1	Vacant
	2	Vacant		2	Vacant
	3	Vacant		3	Vacant
	4	Vacant		4	Vacant
	5	Vacant		5	Vacant
	6	Vacant		6	Vacant
	7	Vacant		7	Vacant
	8	Vacant		8	Vacant
02	1	Vacant	05	1	Heating/cooling
	2	Vacant		2	Blowing/temperature control
	3	Vacant		3	Vacant
	4	Vacant		4	Vacant
	5	Vacant		5	Vacant
	6	Vacant		6	Vacant
	7	Vacant		7	Vacant
	8	Vacant		8	Vacant
03	1	Oil pressure switch			
	2	M terminal			
	3	Vacant			
	4	Vacant			
	5	Vacant			
	6	Vacant			
	7	Vacant			
	8	Vacant			

2 How to Perform a Test Run

□ **Table 3: List of actuator operation status 2. Select CH [03] at Level 2**

CH	No.	Content	CH	No.	Content
01	1	Clutch 1	06	1	Starter
	2	Clutch 2		2	Gas valve 1
	3	Compressor heater 1		3	Gas valve 2
	4	Compressor heater 2		4	Vacant
	5	Four-way valve 1		5	Starter transformer cut-off relay
	6	Oil separator heater		6	Block heater
	7	Accumulator heater		7	Exhaust drain heater
	8	Oil return heater		8	Vacant
02	1	SV1	07	1	Vacant
	2	SV2		2	Vacant
	3	SV3		3	Vacant
	4	SV4		4	Vacant
	5	Vacant		5	Vacant
	6	Vacant		6	Vacant
	7	SV7		7	Vacant
	8	Vacant		8	Vacant
03	1	SV13	08	1	Vacant
	2	Vacant		2	Vacant
	3	Vacant		3	Vacant
	4	SV12		4	Vacant
	5	SV9		5	Vacant
	6	Vacant		6	Vacant
	7	Vacant		7	Vacant
	8	Vacant		8	Vacant
04	1	SV31	09	1	Vacant
	2	SV32		2	Vacant
	3	SV3A		3	Vacant
	4	SV3B		4	Vacant
	5	SV3C		5	Vacant
	6	SV3D		6	Vacant
	7	SV37		7	Vacant
	8	SV3E		8	Vacant
05	1	Vacant			
	2	Vacant			
	3	Vacant			
	4	Vacant			
	5	Vacant			
	6	SV3H			
	7	SV3G			
	8	SV3F			

(Note 1) The signal type can be selected by the memory switch setting.

□ **Figure 2: Content of actuator status segment display**

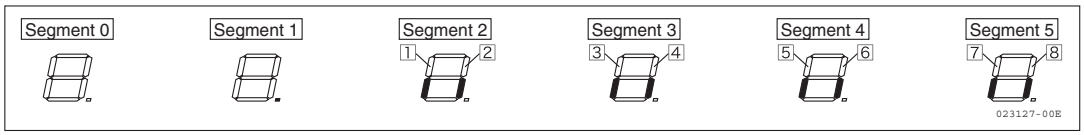

* The numbers in the table indicate the segments 1 to 8 in the above figure.
When an actuator is on, the corresponding segment lights up.

2 How to Perform a Test Run

2. Special operation

(1) Enter RUN mode, select CH [2] at level 1 and press (NEXT). (2) Select the CH of the desired mode (refer to the table below) at Level 2 and press (NEXT). (3) Change the set value as ON/OFF using (UP) and (DOWN), and then press (ENTER) for setting. If (ENTER) is pressed again, the setting becomes inactive.

(A valid setting is constantly lit. An invalid setting blinks.)

Once the settings are valid, they do not become invalid unless they are changed manually or the checker is stopped to display the total operated hours.

□ **Table 4: List of special operation mode settings**

CH	Item	Content	
01	Forced thermostat designation	ON/OFF	
02	Checker mode designation	OFF: auto, ON: checker mode	
03	Operation mode designation	OFF: auto mode, ON: manual mode	
04	Actual engine speed	Minimum speed to maximum speed (min^{-1})	Setting is available only in manual mode.
05	Clutch 1	ON/OFF	
06	Clutch 2	ON/OFF	
07/08	Vacant		
09	Coolant air bleed operation (Note 1)		
10	Pump down for maintenance (Note 1)	ON/OFF	Only one of the functions can be turned on at a time.
11	Refrigerant Misfilling Emergency Mode (Note 1)	ON/OFF	
12/13	Vacant		
14	Refrigerant Additional Filling Mode (Note 1)	ON/OFF	
15/16	Vacant		

Note 1: Power reset is required after the operation is terminated (OFF).

3. Indoor unit

3-1. Indoor Unit Information Display

(1) Enter RUN mode, select CH [3] at Level 1 and press (NEXT). (2) Select CH [01] at Level 2 and press (NEXT). (3) Select the desired indoor unit No. at Level 3 and press (NEXT). (4) When selecting the CH (refer to the table below) of the desired data at Level 4, the data is displayed.

□ **Table 5: List of Indoor Unit Data**

CH	Item	Content	CH	Item	Content
01	Indoor unit No.	0: Communication not established; 1 to 64: indoor unit No.	09	Indoor unit capacity	
02	Number of running indoor units	3rd and 4th digits: number of units with thermostat ON 3rd and 4th digits: number of running indoor units	10	Electronic expansion valve	Pulse
			11	Vacant	
03	RUN mode	3rd digit: temperature control mode H: heating, C: cooling, d: dehumidification, 0: blowing 2nd digit: thermostat ON (1) / OFF (0) 1st digit: run (1) / stop (0)	12	Communication status Number of indoor units display	3rd and 4th digits: communication status 1st and 2nd digits: number of connected indoor units
			13	BS address	
04	Error code		14	BS mode	0: initial status 1: cooling 2: heating 3: switching from cooling to heating 4: switching from heating to cooling
05	Set temperature	°C			
06	Fluid pipe temperature	°C			
07	Gas pipe temperature	°C			
08	Intake Temperature	°C			

2 How to Perform a Test Run

3-2. Indoor Unit Thermostat ON Display

(1) Enter RUN mode, select CH [3] at Level 1 and press NEXT. (2) Select CH [02] at Level 2 and press NEXT. (3) When selecting the CH (refer to the table below) of the desired indoor unit at Level 3, the thermostat ON status is displayed.

□ **Table 6: List of Indoor Unit Thermostat ON**

CH	No.	Content	CH	No.	Content
01	1	1st indoor unit thermostat ON	02	1-8	9th to 16th indoor units thermostat ON
	2	2nd indoor unit thermostat ON	03	1-8	17th to 24th indoor units thermostat ON
	3	3rd indoor unit thermostat ON	04	1-8	25th to 32nd indoor units thermostat ON
	4	4th indoor unit thermostat ON	05	1-8	33rd to 40th indoor units thermostat ON
	5	5th indoor unit thermostat ON	06	1-8	41st to 48th indoor units thermostat ON
	6	6th indoor unit thermostat ON	07	1-8	49th to 56th indoor units thermostat ON
	7	7th indoor unit thermostat ON	08	1-8	57th to 64th indoor units thermostat ON
	8	8th indoor unit thermostat ON			

□ **Figure 3: Content of Indoor Unit Thermostat ON Status Segment Display**

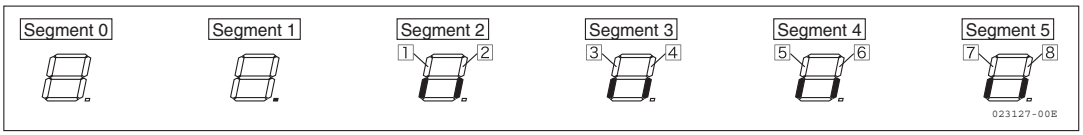

* The numbers in the table indicate the segments 1 to 8 in the above figure.
When an indoor unit is in the thermostat ON state, the corresponding segment lights.

3-3. Indoor Unit Remote Controller ON Display

(1) Enter RUN mode, select CH [3] at level 1 and press NEXT. (2) Select CH [03] at Level 2 and press NEXT. (3) When selecting the CH(refer to the table below) of the desired indoor unit at Level 3, the remote controller ON status is displayed.

□ **Table 7: List of Indoor Unit Remote Controller ON**

CH	No.	Content	CH	No.	Content
01	1	1st indoor unit remote controller ON	02	1-8	9th to 16th indoor units remote controller ON
	2	2nd indoor unit remote controller ON	03	1-8	17th to 24th indoor units remote controller ON
	3	3rd indoor unit remote controller ON	04	1-8	25th to 32nd indoor units remote controller ON
	4	4th indoor unit remote controller ON	05	1-8	33rd to 40th indoor units remote controller ON
	5	5th indoor unit remote controller ON	06	1-8	41st to 48th indoor units remote controller ON
	6	6th indoor unit remote controller ON	07	1-8	49th to 56th indoor units remote controller ON
	7	7th indoor unit remote controller ON	08	1-8	57th to 64th indoor units remote controller ON
	8	8th indoor unit remote controller ON			

□ **Figure 4: Content of Indoor Unit Remote Controller ON Status Segment Display**

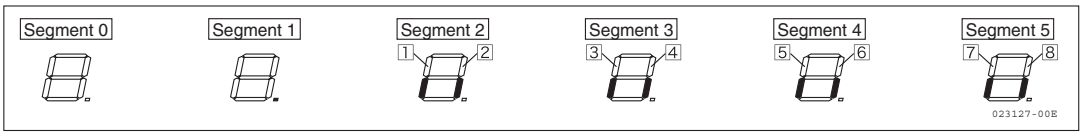

* The numbers in the table indicate the segments 1 to 8 in the above figure.
When a remote controller is ON, the corresponding segment lights.

2 How to Perform a Test Run

4. Item display

4-1. ON/OFF Unit (Memory Switch)

(1) Enter RUN mode, select CH [4] at level 1 and press NEXT. (2) Select CH [01] at Level 2 and press NEXT. (3) Select the CH (refer to the table below) of the desired item at Level 3 and press NEXT. (4) When selecting the CH of the desired item No. at level 4 (refer to the table below), the setting status is displayed.

□ **Table 8: List of ON/OFF Unit Item Display**

<table>
<tr><th>CH</th><th>No.</th><th>Item</th><th colspan="8">Content</th></tr>
<tr><td rowspan="4">01</td><td>4</td><td rowspan="2">Silent cooling mode</td><td>OFF</td><td rowspan="2">Normal operation (factory default)</td><td>ON</td><td rowspan="2">Silent mode operation</td><td>ON</td><td colspan="2" rowspan="2">Super-silent mode operation</td></tr>
<tr><td>5</td><td>OFF</td><td>OFF</td><td>ON</td></tr>
<tr><td>6</td><td rowspan="2">Silent heating mode</td><td>OFF</td><td rowspan="2">Normal operation (factory default)</td><td>ON</td><td rowspan="2">Silent mode operation</td><td>ON</td><td colspan="2" rowspan="2">Super-silent mode operation</td></tr>
<tr><td>7</td><td>OFF</td><td>OFF</td><td>ON</td></tr>
<tr><td>02</td><td>7</td><td>Silent mode external signal</td><td colspan="8">ON: Silent mode turned ON/OFF via an external signal (option) / OFF: Normal (factory default: OFF)</td></tr>
<tr><td>03</td><td>3</td><td>High static pressure support</td><td colspan="8">ON: enabled / OFF: disabled (factory default: OFF)</td></tr>
<tr><td rowspan="2">04</td><td>4</td><td>Energy-saving cooling mode</td><td colspan="8">ON: enabled / OFF: disabled (factory default: OFF)</td></tr>
<tr><td>6</td><td>Energy-saving heating mode</td><td colspan="8">ON: enabled / OFF: disabled (factory default: OFF)</td></tr>
<tr><td rowspan="4">09</td><td>0</td><td rowspan="2">Defrosting</td><td>OFF</td><td rowspan="2">Normal defrosting (factory default)</td><td>ON</td><td colspan="3" rowspan="2">Strong defrosting + stop defrosting</td><td>OFF</td><td rowspan="2">Stop defrosting only</td></tr>
<tr><td>1</td><td>OFF</td><td>OFF</td><td>ON</td></tr>
<tr><td>2</td><td rowspan="2">Reinforced defrosting interval</td><td>OFF</td><td rowspan="2">4 hours (factory default)</td><td>ON</td><td rowspan="2">Never achieved</td><td>OFF</td><td rowspan="2">2 hours</td><td>ON</td><td rowspan="2">8 hours</td></tr>
<tr><td>3</td><td>OFF</td><td>OFF</td><td>ON</td><td>ON</td></tr>
<tr><td>10</td><td>2</td><td>AirGuard setting</td><td colspan="8">OFF: no / ON: yes (factory default: OFF)</td></tr>
<tr><td rowspan="2">13</td><td>4</td><td rowspan="2">Periodic inspection reminder</td><td>OFF</td><td rowspan="2">Reminder: ON Energy saving: ON (factory default)</td><td>ON</td><td rowspan="2">Reminder: OFF Energy saving: OFF</td><td>OFF</td><td rowspan="2">Reminder: ON Energy saving: OFF</td><td>ON</td><td rowspan="2">Do not use this setting.</td></tr>
<tr><td>5</td><td>OFF</td><td>OFF</td><td>ON</td><td>ON</td></tr>
<tr><td rowspan="3">14</td><td>0</td><td>Snow sensor support</td><td colspan="8">OFF: disabled / ON: enabled (factory default: OFF)</td></tr>
<tr><td>1</td><td rowspan="2">Snow sensor wait time setting (in minutes)</td><td>OFF</td><td rowspan="2">50 (factory default)</td><td>ON</td><td rowspan="2">30</td><td>OFF</td><td rowspan="2">20</td><td>ON</td><td rowspan="2">10</td></tr>
<tr><td>2</td><td>OFF</td><td>OFF</td><td>ON</td><td>ON</td></tr>
</table>

4-2. Data Units

(1) Enter RUN mode, select CH [4] at level 1 and press NEXT. (2) Select CH [02] at Level 2 and press NEXT. (3) When selecting the CH (refer to the table below) of the desired item at level 3, the data is displayed.

□ **Table 9: List of Data Unit Item Display**

CH	Item
01	Total operated hours since maintenance
02	Total operated hours
03	Total system starts/stops
04	Total time of controller energization

* Items not listed above are not used.

2 How to Perform a Test Run

STOP Mode

- **When switching the slide switch (SW1) to STOP, the unit enters STOP mode.**
- **To leave the STOP mode, set SW1 to the RUN position so that the total operated hours are displayed. Be careful. The outdoor unit starts operation if the remote controller is in the operation mode when SW1 is shifted to RUN.**
- **STOP mode has five levels from 1 to 5. Use the (BACK) and (NEXT) buttons to shift between these levels.**
- **The channels are shifted using (UP) and (DOWN) buttons.**

	Level 1	Level 2	Level 3	Level 4	Level 5
CH items	1. Alarm display	Alarm display	Alarm reset		
	2. Actuator check	Actuator check	Actuator check action		
	3. Configure items	01. ON/OFF unit (memory switch)	Each item	ON/OFF display	Item data update
		02. Not used			
	4. Alarm/warning history	Alarms/warnings	Among alarm/warning history Alternate display of alarm content		

* During STOP mode, the display is automatically returned to STOP 20 seconds after the termination of operation.

1. Alarm display

Enter STOP mode, make sure that the display [1] (CH1: alarm display) is selected at level 1 and press (NEXT) to display the alarm code.

To clear the alarm conditions, hold down (ENTER) for 3 seconds.

2. Actuator check

Enter STOP mode, select CH [2] at level 1 and press (NEXT). (2) Select the CH (refer to the table below) at level 2 and press (NEXT). (3) Change the set value as ON/OFF using (UP) and (DOWN), and then press (ENTER) for setting. If (ENTER) is pressed again, the setting becomes inactive.

When you change the setting to "ON", the value of "ON" will be applied after a five second countdown.

You can only set one actuator at a time to ON.

□ **Table 10: List of Actuator Checks**

CH	Item	Content	CH	Item	Content	CH	Item	Content
01	Starter	ON/OFF (ON for 10 seconds)	28	Water Motor Valve	ON/OFF	56	Gas valve 1 & 2 simultaneous check	ON/OFF
02	Not used	Do not turn this item off.	29	Throttle valve	ON(H)/OFF	57	Vacant	
03	Gas valve 1	ON/OFF	30	Fuel control valve	ON(H)/OFF	58~59	Vacant	
04	Gas valve 2	ON/OFF	31	Vacant		60	Vacant	
05	Clutch 1	ON/OFF	32	Vacant		61	Vacant	
06	Clutch 2	ON/OFF	33	Vacant		62	SV7	ON/OFF
07	Compressor heaters 1/2/oil return heater	ON/OFF	34	Vacant		63	Vacant	
			35	SV31	ON/OFF	64	SV9	ON/OFF
08	Not used		36	SV32	ON/OFF	65	Vacant	
09	Oil separator heater	ON/OFF	37	Vacant		66	Vacant	
10	Exhaust drain heater	ON/OFF	38	Vacant		67	Accumulator heater	ON/OFF
11	Block heater	ON/OFF	39	Vacant		68	Not used	
12	Four-way valve 1	ON/OFF	40	Vacant		69	SV12	ON/OFF
13	SV1	ON/OFF	41	SV37	ON/OFF	70	SV12 and EV6 synchronized	ON/OFF
14	SV2	ON/OFF	42	Vacant		71	SV13	ON/OFF
15	SV3	ON/OFF	43	Vacant		72	SV3A	ON/OFF
16	SV4	ON/OFF	44	Vacant		73	SV3B	ON/OFF
17	Vacant		45	Vacant		74	SV3C	ON/OFF
18	Fan 1	ON(H)/OFF	46	Vacant		75	SV3D	ON/OFF
19	Fan 2	ON(H)/OFF	47	Vacant		76	SV3E	ON/OFF
20	Fan 3	ON(H)/OFF	48	Vacant		77	SV3F	ON/OFF
21	Cooling water pump	ON(H)/OFF	49	Vacant		78	SV3G	ON/OFF
22	EV1	ON(H)/OFF	50	Vacant		79	SV3H	ON/OFF
23	EV2	ON(H)/OFF	51	Vacant		80	EV7	ON(H)/OFF
24	EV3	ON(H)/OFF	52	Vacant		81	EV3A	ON(H)/OFF
25	EV4	ON(H)/OFF	53	Vacant		82	EV3B	ON(H)/OFF
26	EV5	ON(H)/OFF	54	Cooling water cool-down mode	ON/OFF			
27	EV6	ON(H)/OFF	55	Outdoor unit evacuation mode	ON/OFF			

* When the fan rotates quickly in reverse due to strong wind, it may not operate even when turned on. In that case, block the wind to prevent the fan from turning in reverse. In CH54 cooling water cool-down mode, the cooling water pump and all fans operate simultaneously despite rotation in reverse.

2 How to Perform a Test Run

3. Configure items

3-1. ON/OFF Unit (Memory Switch)

(1) Enter STOP mode, select CH [3] at Level 1 and press NEXT. (2) Select CH [01] at Level 2 and press NEXT. (3) Select the CH (refer to the table below) of the item you want to change at Level 3 and press NEXT. (4) Select the item No. (refer to the table below) of the item you want to change at Level 4 and press NEXT. (5) Change the set value as ON/OFF using UP and DOWN, then press ENTER to change setting.

For CH55, No.1, 2 and 3 are cleared when you set the value to ON. After setting them to ON, they return to OFF when you leave STOP mode. However, this does not mean the clear setting is disabled.

□ **Table 11: List of ON/OFF Unit Item Display**

CH	No.	Item	Content							
01	3	Support for facility-use/outdoor air processing indoor unit	ON: when connecting a facility-use/outdoor air processing indoor unit / OFF: normal (factory default: OFF)							
	4	Silent cooling mode (Note 1)	OFF	Normal operation (factory default)	ON	Silent mode operation	ON	Super-silent mode operation		
	5		OFF		OFF		ON			
	6	Silent heating mode (Note 1)	OFF	Normal operation (factory default)	ON	Silent mode operation	ON	Super-silent mode operation		
	7		OFF		OFF		ON			
02	7	Silent mode external signal	ON: Silent mode turned ON/OFF via an external signal (option) / OFF: Normal (factory default: OFF)							
03	3	High static pressure support	ON: enabled / OFF: disabled (factory default: OFF)							
04	4	Energy-saving cooling mode (Note 1)	ON: enabled / OFF: disabled (factory default: OFF)							
	6	Energy-saving heating mode (Note 1)	ON: enabled / OFF: disabled (factory default: OFF)							
09	0	Defrosting	OFF	Normal defrosting (factory default)	ON	Strong defrosting + stop defrosting			OFF	Stop defrosting only
	1		OFF		OFF				ON	
	2	Reinforced defrosting interval	OFF	4 hours (factory default)	ON	Never achieved	OFF	2 hours	ON	8 hours
	3		OFF		OFF		ON		ON	
10	2	AirGuard setting	OFF: no / ON: yes (factory default: OFF)							
13	4	Periodic inspection reminder	OFF	Reminder: ON Energy saving: ON (factory default)	ON	Reminder: OFF Energy saving: OFF	OFF	Reminder: ON Energy saving: OFF	ON	Do not use this setting.
	5		OFF		OFF		ON		ON	
14	0	Snow sensor support (Note 3)	OFF: disabled / ON: enabled (factory default: OFF)							
	1	Snow sensor wait time setting (in minutes)	OFF	50 (factory default)	ON	30	OFF	20	ON	10
	2		OFF		OFF		ON		ON	
55	2	Clear the GVM aging correction amount	ON: clear / OFF: normal (normally OFF: turned ON only when clearing the value)							
	3	Clear the elapsed time since the last maintenance (Note 2)	ON: clear / OFF: normal (normally OFF: turned ON only when clearing the value)							

* Items not listed above are not used. Do not attempt to change any unlisted settings.

Note 1: Be careful. When in silent mode or energy saving mode, the cooling/heating performance decreases. It might not be possible to cool or heat the unit.

Note 2: The GVM aging correction amount is cleared at the same time.

Note 3: Be careful. The outdoor fan may turn while the unit is stopped.

2 How to Perform a Test Run

4. Alarm/warning history

(1) Enter STOP mode, select CH [4] at Level 1 and press NEXT. (2) Select the CH of the desired alarm/warning (refer to the table below) at level 2 and press NEXT, the code and operation time at occurrence are displayed alternately.

□ **Table 13: List of Alarms and Warnings**

CH	Item	CH	Item
01	1st most recent warning	13	1st most recent alarm
02	2nd most recent warning	14	2nd most recent alarm
:	:	:	:
12	12th most recent warning	24	12th most recent alarm

Problems during Operation

- **When the "run lamp" and "inspection indicator" of the remote controller blinks**
  If a malfunction occurs during operation, the "run lamp" and "inspection indicator" of the remote controller blinks and the error code is displayed. Do a check and necessary procedures according to the content of code.
- **The following display signal is shown simultaneously on the liquid crystal screen of the hour meter ("Operation time display") of the outdoor unit.**
  Refer to the table below and do the necessary checks and procedures.
- **If the unit does not operate, the hour meter does not display any error code, or operation halts without any display, check the cause and perform the necessary procedures according to the service manual.**
- **To reset an error code, turn off the remote controller and press ENTER for more than 3 seconds on the alarm display screen of the STOP mode on the PCB checker.**

□ **Alarm display content**

GYEQ Models					Error
Outdoor unit display	Run Lamp	Inspection display	Unit No.	Remote control display	
-	Blinking	Blinking	Blinking	A0	Indoor Unit - External Protection Device Failure
-	Blinking	Blinking	Blinking	A1	Indoor Unit - P Board Assembly Failure / EEPROM Misconfigured
-	On	Off	Blinking	A1	Indoor Unit - P Board Assembly Failure
-	Blinking	Blinking	Blinking	A3	Indoor Unit - Drain Level System Failure
-	Blinking	Blinking	Blinking	A6	Indoor Unit - Fan Lock
-	On	Off	Blinking	A7	Indoor Unit - Louver Motor (MA) Failure
-	On	Blinking	Blinking	A7	Indoor Unit - Louver Motor Failure
-	Blinking	Blinking	Blinking	A9	Indoor Unit - Electronic Expansion Valve Drive Failure
-	On	Off	Blinking	AF	Indoor Unit - Abnormal Drain
-	On	Off	Blinking	AH	Indoor Unit - Dust Collector Failure
-	Blinking	Blinking	Blinking	AJ	Indoor Unit - Capacity Setting Incorrect
-	Blinking	Blinking	Blinking	C1	Indoor Unit - Fan P Board / Adapter P Board - Control P Board Transmission Failure
-	Blinking	Blinking	Blinking	C4	Indoor Unit - Fluid Pipe Thermistor Fault (contact failure, disconnected, shorted, faulty)
-	Blinking	Blinking	Blinking	C5	Indoor Unit - Gas Pipe Thermistor Fault (contact failure, disconnected, shorted, faulty)
-	Blinking	Blinking	Blinking	C6	Indoor Unit - Fan P Board - Control P Board Misconfigured
-	Blinking	Blinking	Blinking	C9	Indoor Unit - Inlet Air Thermistor Fault (contact failure, disconnected, shorted, faulty)
-	Blinking	Blinking	Blinking	CA	Indoor Unit - Outlet Air Thermistor Fault (contact failure, disconnected, shorted, faulty)
-	On	Off	Blinking	CE	Indoor Unit/Person Detection/Floor Temperature Detection Sensor Failure

2 How to Perform a Test Run

GYEQ Models					Error
Outdoor unit display	Run Lamp	Inspection display	Unit No.	Remote control display	
-	On	Off	Blinking	CJ	Indoor Unit - Remote Control Sensor Failure
E0	Blinking	Blinking	Blinking	E0	Engine Start is Faulty
E1	Blinking	Blinking	Blinking	E1	Engine Overspeed
E2	Blinking	Blinking	Blinking	E2	Engine Stall
E3	Blinking	Blinking	Blinking	E3	Oil Pressure Too Low
E4	Blinking	Blinking	Blinking	E4	Abnormal Cooling Water Temperature
E6	Blinking	Blinking	Blinking	E6	Abnormal Discharge Temperature
E7	Blinking	Blinking	Blinking	E7	Abnormal High Pressure
E9	Blinking	Blinking	Blinking	E9	Abnormal Low Pressure
EA	Blinking	Blinking	Blinking	EA	EEPROM Malfunction
EH	Blinking	Blinking	Blinking	EH	Software Version Mismatch / PCB Mismatch
F0	Blinking	Blinking	Blinking	F0	Starter System Failure
F2	Blinking	Blinking	Blinking	F2	Outdoor Fan Failure
F3	Blinking	Blinking	Blinking	F3	Oil Pressure Switch Failure
F4	Blinking	Blinking	Blinking	F4	Cooling Water Temperature Sensor Disconnected/Shorted
F6	Blinking	Blinking	Blinking	F6	Discharge Temperature Sensor Disconnected/Shorted
F7	Blinking	Blinking	Blinking	F7	Engine Room Temperature Abnormal
F9	Blinking	Blinking	Blinking	F9	Insufficient Refrigerant
FH	Blinking	Blinking	Blinking	FH	Insufficient Compressor Oil Detected
FJ	Blinking	Blinking	Blinking	FJ	Abnormal High Differential Pressure
H0	Blinking	Blinking	Blinking	H0	Misfire Detected
H1	Blinking	Blinking	Blinking	H1	Clutch Failure
H6	Blinking	Blinking	Blinking	H6	Indoor Unit Electronic Expansion Valve Failure
J1	Blinking	Blinking	Blinking	J1	Air-Fuel Ratio Controller Failure
J2	Blinking	Blinking	Blinking	J2	Intake Air Temperature Sensor Disconnected/Shorted
J3	Blinking	Blinking	Blinking	J3	Outdoor Air Temperature Sensor Disconnected/Shorted
J5	Blinking	Blinking	Blinking	J5	Outdoor Unit Electronic Expansion Valve Failure
J6	Blinking	Blinking	Blinking	J6	Oil Return Solenoid Valve Failure
J7	Blinking	Blinking	Blinking	J7	High Pressure Sensor System Failure
J8	Blinking	Blinking	Blinking	J8	Exhaust Temperature Sensor Disconnected
J9	Blinking	Blinking	Blinking	J9	Low Pressure Sensor Disconnected/Shorted
JA	On	Off	Blinking	JA	Compressor Automatic Emergency Run (during continued running)
JA	Blinking	Blinking	Blinking	JA	Compressor Automatic Emergency Run
JH	Blinking	Blinking	Blinking	JH	Pressure Sensor Failure
JJ	Blinking	Blinking	Blinking	JJ	Oil Temperature Sensor Disconnected/Shorted
JF	Blinking	Blinking	Blinking	JF	Receiver Temperature Sensor System Failure
L1	Blinking	Blinking	Blinking	L1	Exhaust Temperature Abnormal
L8	On Off	On	Off	Off	Periodic Inspection Reminder (not an error message) If 200 or less hours remain before the next periodic inspection
L8	On Off	On	Blinking	L8	Periodic Inspection Reminder (not an error message) If the periodic inspection time has passed
LE	Blinking	Blinking	Blinking	LE	Starter Relay Failure
LF	Blinking	Blinking	Blinking	LF	BS Unit Circuit Switch Failure
-	On Off	Blinking	Blinking	M1	Centralized Controller P Board Failure
-	On Off	Blinking	Blinking	M8	Transmission Failure Among Centralized Controllers
-	On Off	Blinking	Blinking	MA	Centralized Controller Mismatch
-	On Off	Blinking	Blinking	MC	Centralized Controller Address Incorrect
P0	Blinking	Blinking	Blinking	P0	Too Many Indoor Units Connected

2 How to Perform a Test Run

GYEQ Models					Error
Outdoor unit display	Run Lamp	Inspection display	Unit No.	Remote control display	
P3	Blinking	Blinking	Blinking	P3	Total Indoor Unit Capacity Too Large
U2	Blinking	Blinking	Blinking	U2	Inter-CPU Communication Failure / Software Mismatch / ROM Abnormal
U3	Blinking	Blinking	Blinking	U3	Inter-Unit Communication Failure
U4	Blinking	Blinking	Blinking	U4	Outdoor/Indoor Unit Transmission Failure
-	Blinking	Blinking	Blinking	U5	Transmission Failure Between Remote Control and Indoor Units
-	Blinking	Blinking	Blinking	U7	External Control Adapter Failure
-	Blinking	Blinking	Off	U8	Transmission Failure between Master and Slave Remote Control Units (Slave Remote Control Unit Failure)
-	Blinking	Blinking	Blinking	U9	Failure of Another Unit in the Same System
UA	Blinking	Blinking	Blinking	UA	Indoor Unit and Remote Control Mismatch
-	On	Off	On	UC	Centralized Control Address Conflict
-	Blinking	Blinking	Blinking	UE	Transmission Failure Between Indoor Unit and Centralized Controller
-	Blinking	Blinking	Blinking	UF	System Not Configured
-	Blinking	Blinking	Blinking	UH	System Failure
-	Blinking	Blinking	Blinking	UJ	Optional Equipment Electrical Component Failure

CAUTION: Depending on the error content, it is possible to not have a service indication appear on the remote controller and it is possible to continue the unit operation. Under these circumstances, inspection and repair are required.
If any error codes are displayed, be sure to contact your dealer.

* 1. The inspection indicator blinks in 1-second intervals
* 2. The inspection indicator blinks in 4-second intervals

(Outdoor unit display)

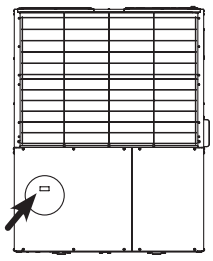

External Filter Clogging Judgment

- **If "Cannot become cool/warm" trouble occurs during the test run, the external filter may be clogged. In this case, check the pressure difference from the servicing ports on the upstream and downstream of the external filter for the gas pipe.**
  If the pressure difference is 0.2 MPa or more during operation, it means the external filter is clogged and needs to be replaced.
  The heat insulator in the upper portion of the servicing port can be removed along the roulette.
  For the fluid pipe external filter, check the temperature difference between the upstream and downstream of the filter (surface).
  If the temperature difference is 5 ºC or more during operation, it means the external filter is clogged and needs to be replaced.

[Replacing the external filter]

1. Close the fluid side closing valve.
2. Perform pump down operation (special operation mode: CH10 from onboard checker).
3. After pump down is complete, close the gas side closing valve.
4. Recover the remaining refrigerant.
5. Replace the filter (fluid pipe, gas pipe) and gasket (gas pipe only) and perform evacuation after air tightness check.
   Be careful of the direction of the external filter for the gas pipe.
6. When refrigerant is charged to the fluid pipe and cannot be charged completely, charge the refrigerant using "Additional Refrigerant Charging Mode" (special operation mode: CH14 from onboard checker).
7. Replace the heat insulator and return the racking, etc.

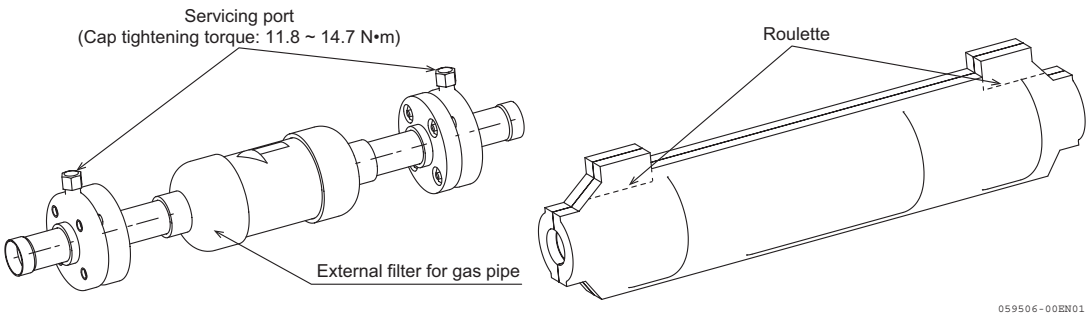

Confirmation after Operation

- **To test run operators**
  (1) Explain the operations of the product and cautions on safety to customers.
  (2) After the test run and confirmation of normal operation, hand this instruction manual to customers.

Part 3
Control and Functionality

1. Control Overview....90
   1.1 System Control Overview....90
   1.2 Startup Sequences....93
   1.3 Actuators....95
   1.4 Setting Up and Rewiring the Outdoor Unit....96
2. Outdoor Unit Control....98
3. Actuator Control....103
   3.1 Electric Motor Operated Valve Control....103
   3.2 Pump Control....107
   3.3 Fan Control....107
   3.4 Heater Control....107
   3.5 Starter Control....107
   3.6 Compressor Clutch Control....107
   3.7 Ignition Timing Control....108

1. Control Overview

1.1 System Control Overview

Fig. 3.1/ System control flow chart

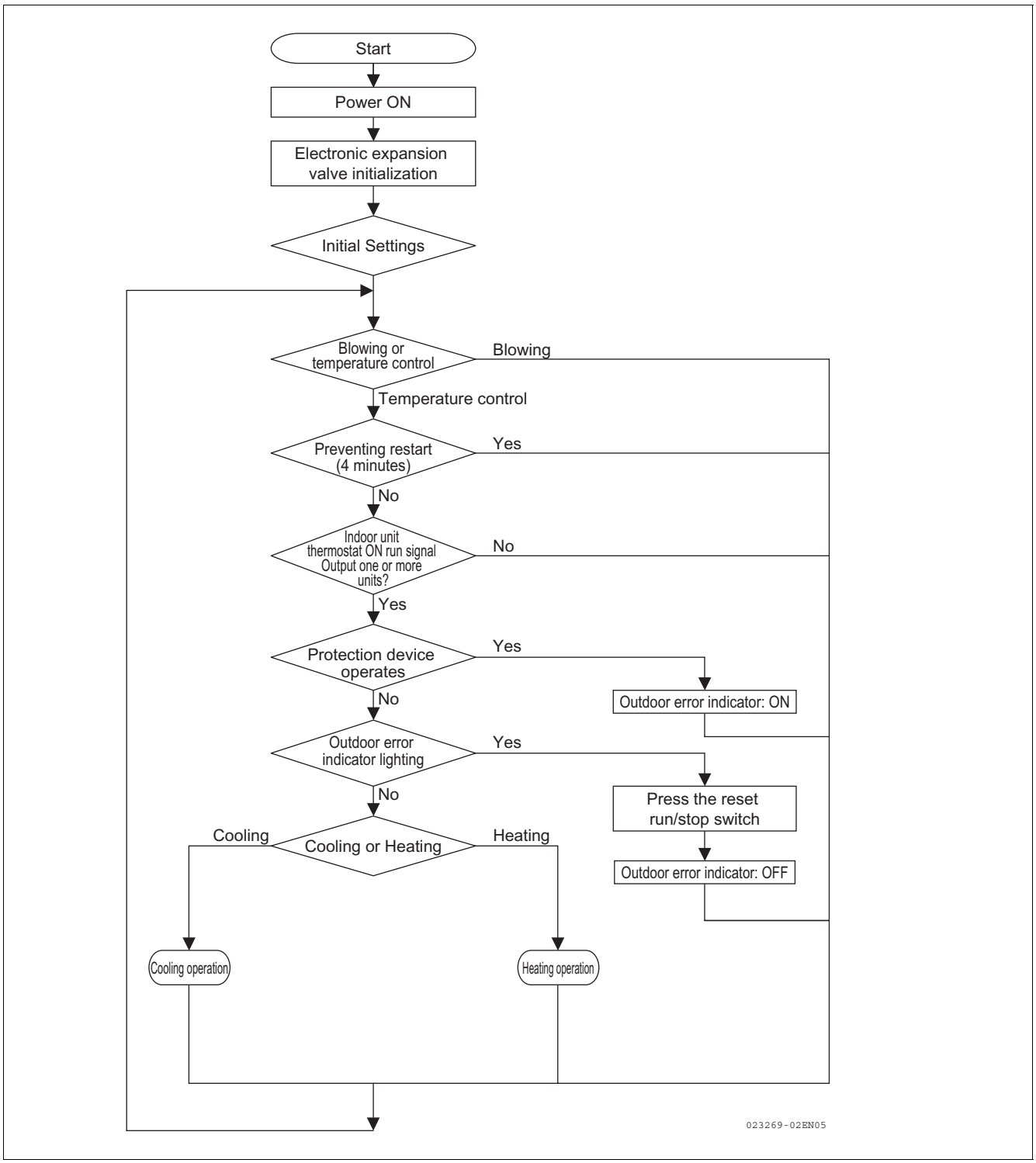

■ Basic cooling control

The basic cooling control function keeps the compressor intake pressure (low pressure side) at a constant level by controlling the compressor capacity. It controls the compressor capacity through controlling the engine speed and switching the number of compressors operating.
If the low-side pressure cannot be controlled solely through controlling the compressor, however, additional control is performed to keep the low-side pressure constant.

Fig. 3.2/ Basic cooling control: Flow chart

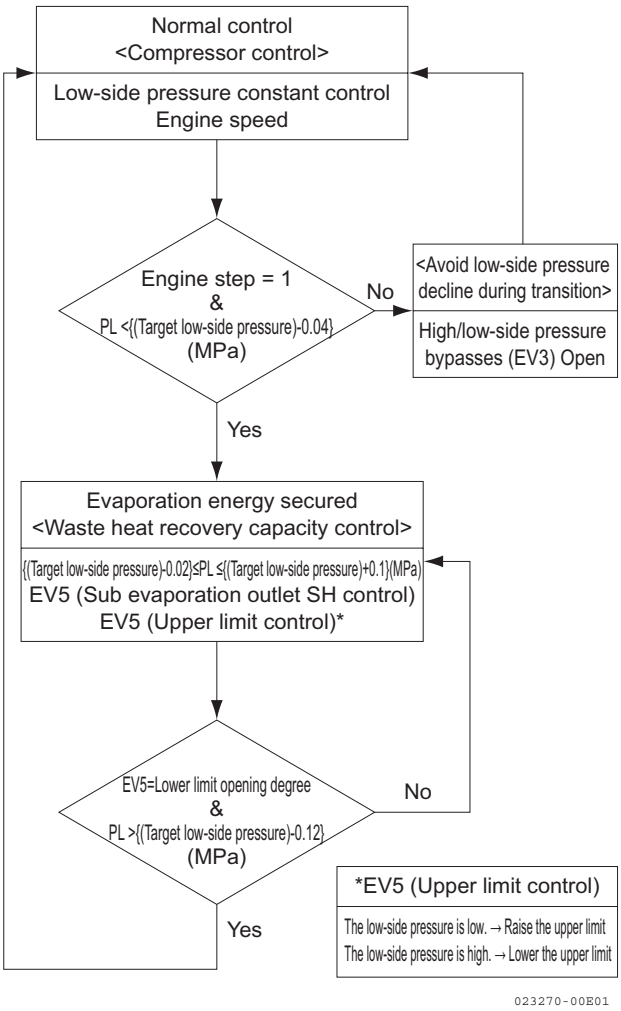

■ (Cooling) "Avoid Low-Side Pressure Drop during Transition" control function

When the low-side pressure significantly drops for such a reason as many indoor units stop operating almost simultaneously, this function is activated to prevent the low-side pressure from rapidly dropping by opening the high/low pressure bypass (EV3).

■ (Cooling) "Waste Heat Recovery Capacity" control function

When the low-side pressure on the compressor intake side is lower than the target low-side pressure, this function is activated to adjust the low-side pressure to the normal low-side pressure target level and retain it at that level by utilizing the engine cooling water heat via the waste heat recovery device to heat the intake side refrigerant gas (partially liquefied refrigerant). This control function is triggered when the engine speed is at the lowest level and yet the low-side pressure is lower than the target low-side pressure. The function controls the superheating degree of EV4 at the waste heat recovery device outlet and restricts its opening degree upper limit so that the appropriate amount of refrigerant passes through the waste heat recovery device, thereby optimizing the recovered heat quantity.

Table 3.1/ Engine speed range (cooling) (min^{-1})

Outdoor units	Model	GYEQ20AN	GYEQ30AN
Full range	Maximum revolution	2200	2300
	Minimum revolution	650	650
2 compressors	Maximum revolution	2100	2300
	Minimum revolution	700	725
2 compressors *1	Maximum revolution	-	-
	Minimum revolution	-	-
1 compressor *1 (compressor 2)	Maximum revolution	2000	2300
	Minimum revolution	700	650
1 compressor (compressor 1)	Maximum revolution	2200	2300
	Minimum revolution	650	650

∗ 1. For GYEQ30AN, variable capacity SV = ON

■ Basic heating control

The basic heating control function keeps the compressor discharge pressure (high-side pressure) at constant level by controlling the compressor capacity. It controls the compressor capacity through controlling the engine speed, switching the number of compressors operating. If the high-side pressure cannot be controlled solely through controlling the compressor, however, additional control is performed to keep the target high-side pressure at a constant level.

Fig. 3.3/ Basic heating control: Flow chart

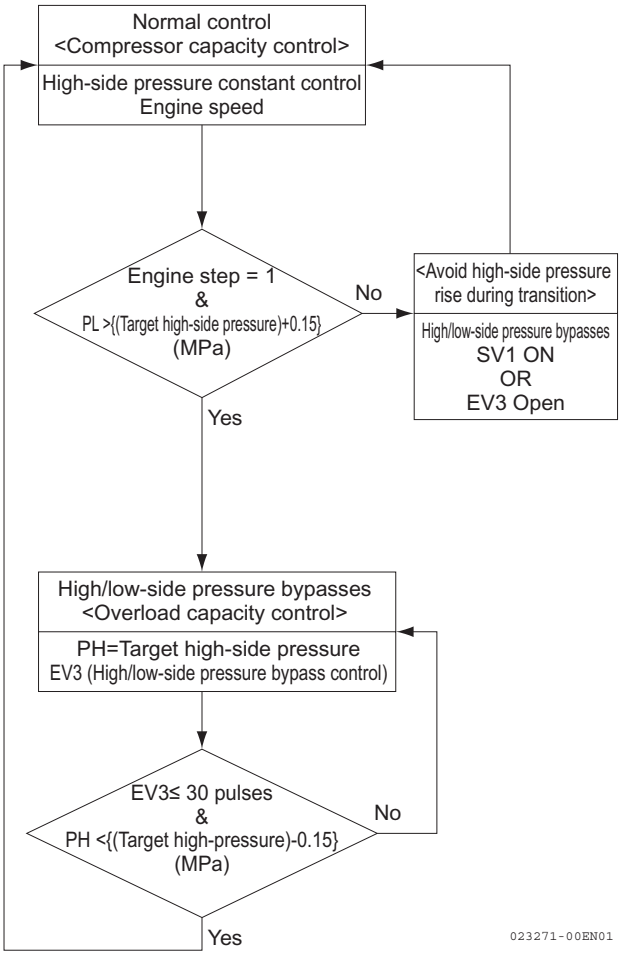

■ (Heating) "Overload Capacity" control function

When the high-side pressure on the compressor discharge side is higher than the target high-side pressure, this function is activated to adjust the high-side pressure at the normal high-side pressure target level and retain it at that level by utilizing the high/low-pressure bypass to return excessive discharge gas to the intake side. This control function is triggered when the engine speed is at the lowest level and yet the high-side pressure is higher than the target high-side pressure. The function optimizes the bypassed amount by controlling the opening degree of EV3 so that the target high-side pressure remains at a constant level.

■ (Heating) "Avoid High-Side Pressure Rise during Transition" control function

When the high-side pressure significantly rises for such a reason as many indoor units stop operating almost simultaneously, this function is activated to prevent the high-side pressure from rapidly rising by opening the high/low pressure bypasses (EV3) and solenoid valve (SV1).

Table 3.2/ Engine speed range (heating) (min^{-1})

Outdoor units	Model	GYEQ20AN	GYEQ30AN
Full range	Maximum revolution	2800	2800
	Minimum revolution	650	650
2 compressors	Maximum revolution	2800	2800
	Minimum revolution	700	725
2 compressors *1	Maximum revolution	-	-
	Minimum revolution	-	-
1 compressor *1 (compressor 2)	Maximum revolution	2000	2300
	Minimum revolution	700	650
1 compressor (compressor 1)	Maximum revolution	2200	2300
	Minimum revolution	650	650

∗ 1. For GYEQ30AN, variable capacity SV = ON

1.2 Startup Sequences

Fig. 3.4/ Outdoor unit startup sequence

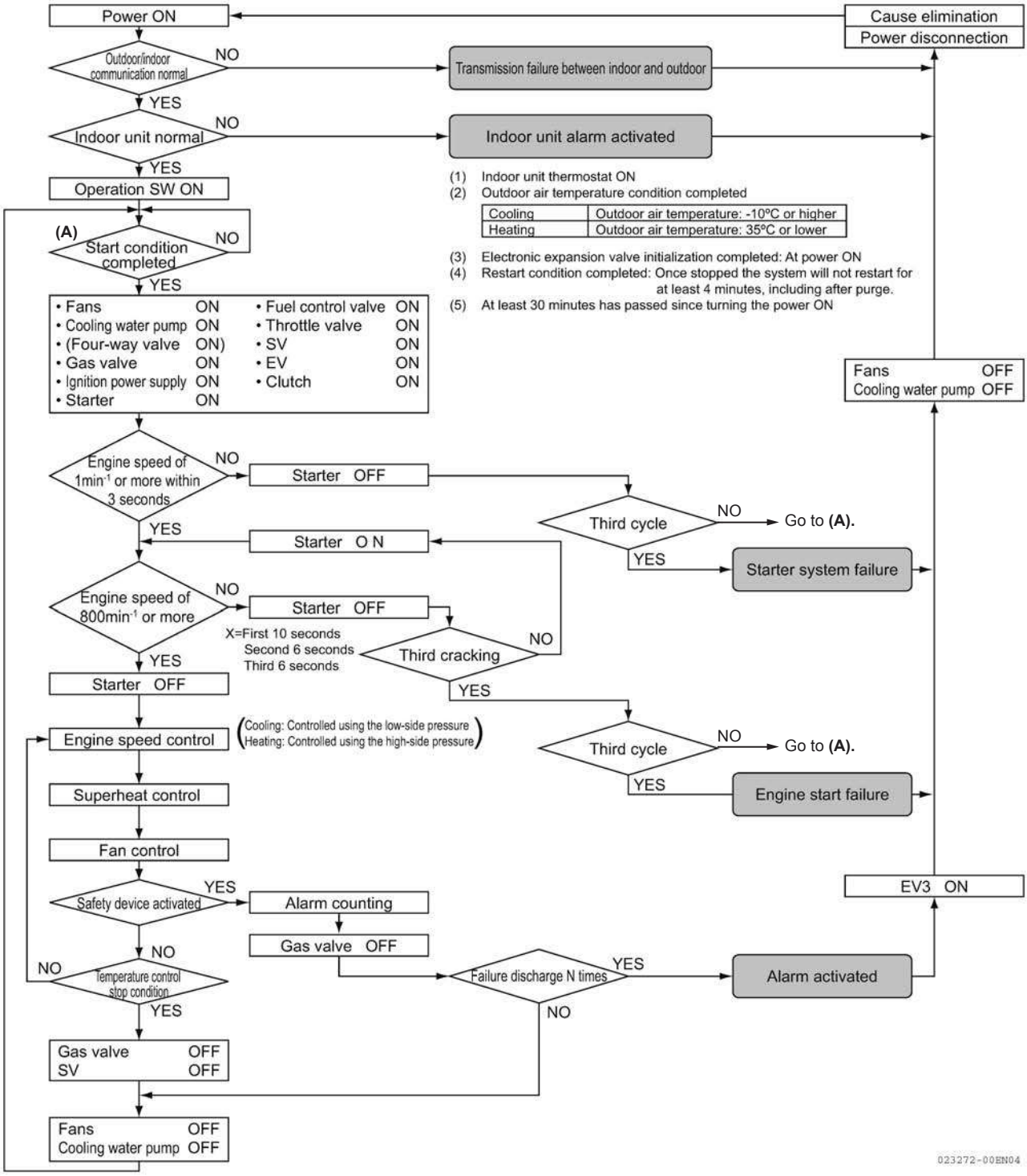

■ Normal startup

The outdoor unit follows the time chart on the right when starting up heating and cooling operations. (Provided that the engine starts up (its speed exceeds 800 min^{-1}) the first time the starter is turned ON.)

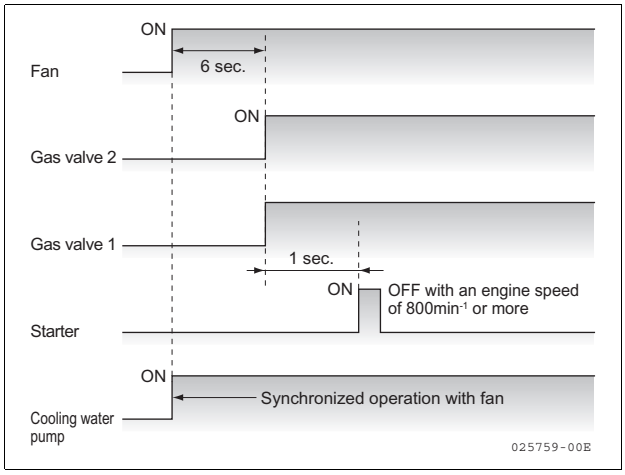

■ Sequence applied when the engine fails to start up or the starter system is not operating correctly

When the engine speed is 800 min^{-1} or lower As shown at right, one cycle is completed by turning on/off the starter as follows: ON (10 sec) → OFF (10 sec) → ON (6 sec) → OFF (10 sec) → ON (6 sec). The engine startup occurs at the time of [t1].

When the engine fails to start up (i.e., fails to exceed 800 min^{-1}) at a third attempt within 2 hours, the unit outputs an alarm and stops at the time of [t3]. (In checker mode, the unit outputs an alarm and stops when the engine fails to start up at the first attempt.)

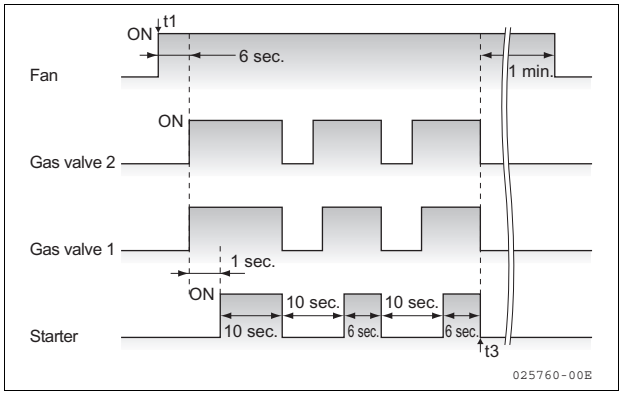

■ Sequence applied when no engine speed pulse is detected

When the starter system is not operating correctly (i.e., when no speed pulse is detected within 3 seconds after the starter is turned on), the unit enters into 4-minute standby mode when [t2] is reached.

If this occurs at a third attempt within 2 hours, however, the unit outputs an alarm and stops (in checker mode, it outputs an alarm and stops when this occurs at the first attempt).

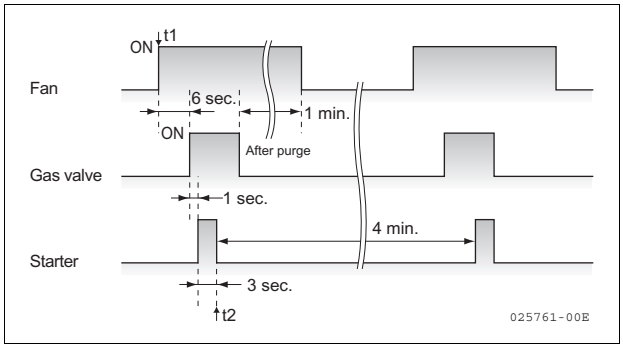

1.3 Actuators

Table 3.3/ Operation of each actuator

Name	Cooling dehumidi-fication	Heating	Concurrent cooling/ heating	Blowing	Defrosting	Thermo-OFF Operation -OFF	System stop	Remarks
Gas 1 & 2	○	○	○	—	○	Δ	—	
Fuel control valve	Δ	Δ	Δ	—	Δ	Δ	—	
Throttle valve	Δ	Δ	Δ	—	Δ	Δ	—	
Fans 1, 2 & 3	Δ	Δ	Δ	—	Δ	Δ	—	
Cooling water pump	○	○	○	—	○	Δ	—	
Four-way valve 1	Δ	—	—	—	—	Δ	Δ	Normal heating
EV1 (outdoor electronic expansion valve)	Δ	Δ	Δ	—	Δ	Δ	—	
EV2 (outdoor electronic expansion valve)	Δ	Δ	Δ	—	Δ	Δ	—	
EV3 (outdoor electronic expansion valve)	Δ	Δ	Δ	—	Δ	Δ	Δ	
EV4 (outdoor electronic expansion valve)	Δ	Δ	Δ	—	Δ	Δ	—	
EV5 (outdoor electronic expansion valve)	Δ	Δ	Δ	—	Δ	Δ	—	
EV6 (outdoor electronic expansion valve)	Δ	Δ	Δ	—	Δ	Δ	—	
EV7 (outdoor electronic expansion valve)	—	Δ	Δ	—	—	—	—	
EV3A (outdoor electronic expansion valve)	—	—	Δ	—	Δ	—	—	
EV3B (outdoor electronic expansion valve)	—	—	Δ	—	Δ	—	Δ	
Clutches 1 & 2	Δ	Δ	Δ	—	Δ	Δ	—	
Compressor heaters 1 & 2	—	—	—	○	—	—	○	
Oil separator heater	—	—	—	Δ	—	—	Δ	
Accumulator heater	—	—	—	Δ	—	—	Δ	
Oil return heater	—	—	—	○	—	—	○	
SV1 (solenoid valve)	—	Δ	Δ	—	Δ	Δ	—	
SV2 (solenoid valve)	Δ	Δ	—	—	Δ	Δ	—	
SV3 (solenoid valve)	Δ	Δ	Δ	—	Δ	Δ	—	
SV4 (solenoid valve)	Δ	Δ	Δ	—	Δ	Δ	—	
SV6 (solenoid valve)	Δ	—	—	—	—	Δ	—	
SV7 (solenoid valve)	Δ	Δ	Δ	—	Δ	Δ	—	
SV8 (solenoid valve)	—	Δ	Δ	—	—	—	—	
SV9 (solenoid valve)	Δ	Δ	Δ	—	—	Δ	—	
SV10 (solenoid valve)	Δ	—	—	—	—	Δ	—	
SV12 (solenoid valve)	Δ	Δ	Δ	—	Δ	Δ	—	
SV31 (solenoid valve)	Δ	Δ	Δ	—	Δ	Δ	—	Normally open
SV32 (solenoid valve)	Δ	Δ	Δ	—	Δ	Δ	—	
SV37 (solenoid valve)	Δ	Δ	Δ	—	Δ	Δ	—	
SV3A (solenoid valve)	Δ	—	Δ	—	Δ	Δ	Δ	
SV3B (solenoid valve)	Δ	—	Δ	—	Δ	Δ	Δ	
SV3C (solenoid valve)	Δ	—	Δ	—	Δ	Δ	Δ	
SV3D (solenoid valve)	Δ	—	Δ	—	Δ	Δ	Δ	
SV3E (solenoid valve)	—	Δ	Δ	—	Δ	Δ	Δ	
SV3F (solenoid valve)	—	Δ	Δ	—	Δ	Δ	Δ	
SV3G (solenoid valve)	Δ	—	Δ	—	Δ	Δ	—	
SV3H (solenoid valve)	Δ	—	Δ	—	Δ	Δ	—	

○: Normally ON Δ: Turned ON/OFF or opening degree varied by the control function specific to that actuator -: Normally OFF
Thermo-OFF/operation-OFF: Outdoor unit is in pump down operation.
System stop: Outdoor unit is stopped (including stop of outdoor unit due to thermo-OFF).
∗ Whether each of the actuators listed exists depends on the model and version.

1.4 Setting Up and Rewiring the Outdoor Unit

■ Configuring the outdoor unit DIP switches

Caution Before accessing the DIP switches, turn off the power and make sure that none of the LEDs on the circuit board are lit. Attempting to access the DIP switches with any LED lit could result in an electrical shock due to electricity remaining in the circuit.

Caution After changing any DIP switch setting or connector, you have to turn the power off and back on for the new setting to take effect.

Be sure to check the DIP switch settings regardless of whether or not you want to change the factory default settings. After changing any DIP switch setting or connector, you have to turn the power off and back on for the new setting to take effect. When you want to reset the outdoor unit power supply, turn off the power and make sure that none of the LEDs on the circuit board are lit before turning back on the power. An attempt to reset the power supply with any LED lit may fail due to electricity remaining in the circuit.

[Configuring the DIP switches on the main circuit board]

Refer to “3. Setting and Rewiring the Outdoor Unit” in Wiring Manual on page 63.

Table 3.4/ Configuring the DIP switches on the DCBL circuit board

Name	SW No.	Switch position	Applicable	Factory default	On-site configuration	Remarks
DS1	1	OFF	○	All OFF	Cannot be changed	Must be always OFF.
	2	OFF				
	3	OFF				
	4	OFF				

■ **Configuring the switches on the BS unit**

Table 3.5/ Configuring the switches on the BS unit

• You have to configure these switches when you use a heating/cooling switching remote controller or centralized cooling/heating remote controller. • Be sure to configure the switches before turning ON the power since they are read by the microcomputer upon power ON. • When you are finished configuring the switches, be sure to close the electrical box cover.	
To use a heating/cooling switching remote controller:	
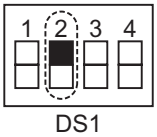 Turn on DS1-2.	To use a heating/cooling switching remote controller, connect to terminal (A), (B), and (C) located on the circuit board contained in the BS unit electrical box.
To use a centralized cooling/heating remote controller (an optional outdoor unit external control adaptor is required):	
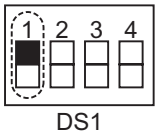 Turn on DS1-1	To use a centralized cooling/heating remote controller, connect the connector of the outdoor unit external control adaptor to connector CN18 located on the circuit board contained in the electrical box.

Fig. 3.5/ Example of connecting 20 indoor units using a refrigerant system address of "23"

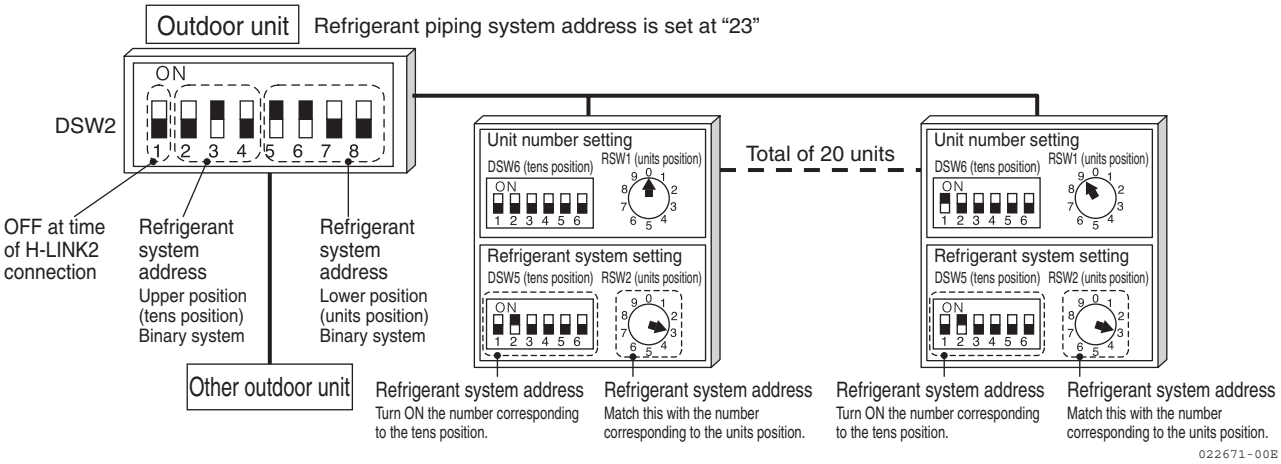

∗ For more information on indoor unit configurations, see the instruction manual that comes with the indoor units.

■ Wiring change

- After you have finished wiring work and outdoor unit configuration work, perform "Wiring change" by pressing and holding down SW2 on the main circuit board for at least 5 seconds with the power ON prior to test run. Without the "Wiring change," establishing the communication may fail.

2. Outdoor Unit Control

■ (Cooling/heating) "Inhibit" control function

- If the outdoor air temperature drops to -10°C or lower during cooling, this function is activated to inhibit the cooling indoor unit only from operating.
  If the outdoor air temperature rises to 30°C or higher during heating, this function is activated to inhibit the heating indoor unit only from operating. When an indoor unit "Thermo ON" signal is received after the outdoor unit has been stopped by this function, the function intermittently runs the fans in a cyclic pattern: ON for 5 minutes and OFF for 30 minutes.
- After the outdoor unit is stopped, this function inhibits operation from being started again for 4 minutes.

■ (Cooling/heating) "Avoid Excessive Discharge Temperature" control function

When the discharge temperature is 110°C or higher, this function is activated to reduce the engine speed steps in decrements. (1 step every 5 minute)
This function is cancelled when the temperature falls to 100°C or lower during cooling or to 107.5°C or lower during heating.

■ (Cooling/heating) "Avoid Excessive Cooling Water Temperature" control function

When the cooling water temperature is 100°C or higher, this function is activated to reduce the engine speed steps in decrements. (1 step every 1 minute)
This function is cancelled when the cooling water temperature falls to 95°C or lower.
When the cooling water temperature is 90°C or higher, this function is activated to increase the fan speed steps in increments.
This function is cancelled when the cooling water temperature falls to 85°C or lower.

■ (Cooling/heating) Oil separator heating control function

If a severe backflow of fluid occurs while the outdoor unit is running, this function is activated to perform bypass operation by closing electronic expansion valves EV1 and EV2, maintaining the engine speed steps at the lower limit, opening electronic expansion valve EV3, and opening solenoid valve SV1. When the water temperature rises, the function heats the refrigerant. Once it has finished heating the refrigerant, the function performs "pump down" operation, temporarily stops the outdoor unit and then restarts it. If the function cannot finish heating the refrigerant within 40 minutes, an abnormal stop occurs.

■ (Cooling/heating) "Pump Down" control function

Before the outdoor unit is stopped, this function is activated to close the electronic expansion valves (EV1 to EV7, 3A, 3B) and run the outdoor unit in pump down mode for 6 minutes at maximum in order to gasify the refrigerant.

■ (Cooling/heating) "Ensure Minimum Operating Time" control function

When the user attempts to stop the outdoor unit before reaching the minimum operating time, this function is activated to run the outdoor unit in pump down mode till the minimum operating time elapses.

■ (Cooling/heating) "Snow Sensor Outdoor Fan" control function

When the outdoor unit receives a contact input signal from the snow sensor, which is enabled through the memory switches, this function is activated to intermittently run the fans after the specified time period* elapses, whether or not the outdoor unit is currently running.
* This time setting can be configured using the memory switches.

■ (Cooling/heating) "Mode Change" control function

Available with a cooling/heating outdoor unit, this function switches the outdoor unit among different modes (cooling, concurrent cooling/heating, heating, and so on) depending on the indoor cooling air conditioning and heating air conditioning loads.

■ (Cooling/heating) "Stop Preparation Mode" control function

Available with a cooling/heating outdoor unit, this function changes the refrigerant circuit while the outdoor unit is stopped so that the next startup can be smoothly performed.

■ (Cooling/heating) "Refrigerant Recovery" control function

Available with a cooling/heating outdoor unit, this function controls the recovery of refrigerant accumulated in the outdoor heat exchanger during concurrent cooling/heating operation in low outdoor air temperatures. The function changes the mode or performs a pump down operation for approximately 5 minutes every 8 hours.

■ (Cooling) "Avoid Low-Side Pressure Drop during Transition" control function

[1.1 System Control Overview] See the **Basic cooling control** section.

■ (Cooling) "Avoid Excessive High-Side Pressure" control function

When high-side pressure 1 is 3.37 MPa or higher, this function is activated to reduce the engine speed steps in decrements. (1 step every 1 minute)
When high-side pressure 1 is 3.47 MPa or higher, this function further reduces the engine speed steps in decrements. (1 step every 5 seconds)
The function is cancelled when high-side pressure 1 falls to 3.17 MPa or lower.
The function temporarily stops the outdoor unit if high-side pressure 1 does not fall below 3.60 MPa within 120 seconds.

■ (Cooling) "Pump Down for Maintenance" operation mode

When the "Pump Down for Maintenance" function is turned ON from the onboard checker, this function is activated to automatically perform pump down operation. (Before using this function, you have to close the stop valve on the liquid side.)
The function completes the pump down operation and stops the engine when the low-side pressure has remained at 0.12 MPa or lower for 10 seconds or has fallen to 0.05 MPa or lower. (After using this function, you have to immediately close the stop valve on the gas side.)

■ (Cooling) "Oil Return" control function

1 hour after starting the outdoor unit and at every cumulative 1 hour after this, or when the oil separator oil level is at or below the detection level, this function opens the electronic expansion valves of any inactive indoor units and performs the oil return operation for approximately 6 minutes.

■ (Cooling) "Waste Heat Recovery Capacity" control function

[1.1 System Control Overview] See the **Basic cooling control** section.

■ (Cooling) "Maintain High-Side Pressure" control function 2

When the outdoor air temperature is low, this function is activated to maintain high-side pressure 1 at a constant level by controlling the fan operation.

■ (Cooling) "Outdoor Fan High Static Pressure" mode

Once support for high static pressure has been enabled through the memory switches, this function is activated to change the fan speed upper limit so that the static pressure on the fan blowing side is accepted up to 30 Pa.

■ (Cooling) "Circuit Reverse" control function

If the previous operation was heating or at the first startup after turning on the outdoor unit power, this function performs a heating operation for 4 minutes to move the refrigerant in the link gas pipe to the liquid pipe side.

■ (Heating) "Overload Capacity" control function

[1.1 System Control Overview] See the **Basic heating control** section.

■ (Heating) "Inhibit Operation under Overload" control function

When the outdoor air temperature rises to 26°C or higher during heating and the "Overload Capacity" control function (for heating) cannot control high-side pressure 1, this function is activated to lower the operable range of outside air temperatures by temporarily stopping the outdoor unit.
(Cooling/heating) This control function determines the outside air temperature threshold (35°C to 26°C) for the "Inhibit" control function (for cooling/heating) to be activated.

■ (Heating) "Defrost" control function

When the outdoor heat exchanger is frosted and its temperature drops, this function is activated to defrost the heat exchanger by turning ON SV3A/3B/3C/3D and turning OFF SV3E/3F so that gas is discharged.

- Activation conditions
  The control function is activated when intake temperature 1 is lower than -3°C and the difference between the outdoor air temperature and intake temperature 1 stays constant for 10 minutes or longer.
- Deactivation conditions
  When the specified time period or longer has elapsed after turning ON SV3A/3B/3C/3D and turning OFF SV3E/3F or when high-side pressure 1 has risen to the specified pressure or higher, the defrosting process is complete, and SV3A/3B/3C/3D are returned to the OFF position and SV3E/3F are returned to the ON position.

■ (Heating) "Enhance Performance at Low Outdoor Air Temperatures" control function

When the number of engine speed steps is the maximum standard value, high-side pressure 1 is equal to or lower than the high-side pressure set point, and the outdoor air temperature is 6°C or lower, this function is activated to enhance heating performance by increasing the number of engine speed steps.

■ (Heating) "Avoid High-Side Pressure Rise during Transition" control function

[1.1 System Control Overview] See the **Basic heating control** section.

■ (Heating) "Oil Return" control function

1 hour after starting the outdoor unit and at every cumulative 8 hours after this, or when the oil separator oil level is at or below the detection level, this function sets the outdoor unit circuit and BS circuit to the cooling circuit and performs the oil return operation.

■ (Heating) "Indoor Unit Refrigerant Recovery" control function

If refrigerant accumulates in an inactive indoor unit, this function increase the expansion valve opening degree to perform a refrigerant recovery operation.

■ (Cooling) (Heating) "Energy Saving Mode" control function

You can select the energy saving mode by configuring the memory switches with the onboard checker of the main circuit board as shown in the table below. The energy saving mode works by restricting the engine speed upper limit to reduce gas consumption regardless of whether the load is low or high.

[Note] Cooling/heating performance is more or less sacrificed when energy saving mode is configured, possibly resulting in "Cannot Get Cool/Warm" complaints from end users.

[Configuring the energy saving mode]

	Memory switch	Normal operation mode	Energy saving mode
Cooling	CH4-No.4	OFF	ON
Heating	CH4-No.6	OFF	ON

■ (Cooling) (Heating) "Quiet Mode" control function

When you need to operate the unit at a lower noise level than normal as is the case with cooling/heating during midnight hours, you can select the "quiet mode" by following the instructions given below. The quiet mode works by controlling the engine speed and outdoor fan speed. To enable the quiet mode, use the onboard checker of the main circuit board to configure the memory switches as described in the table below. You can choose one of the three operation modes: "normal," "quiet", "super-quiet."

[Note] Cooling/heating performance is reduced when quiet mode or super-quiet mode is set, possibly resulting in "Cannot Get Cool/Warm" complaints from end users.

[Configuring the quiet/super-quiet mode]

	Memory switch	Normal operation mode	Quiet mode	Super-quiet mode
Cooling	CH1-No.4	OFF	ON	ON
	CH1-No.5	OFF	OFF	ON
Heating	CH1-No.6	OFF	ON	ON
	CH1-No.7	OFF	OFF	ON

[Normal operation mode]

The unit runs as normal, without entering the quiet or super-quiet mode.

[Quiet mode]

The unit automatically switches between the quiet and normal modes depending on the outdoor air temperature.

[Cooling]

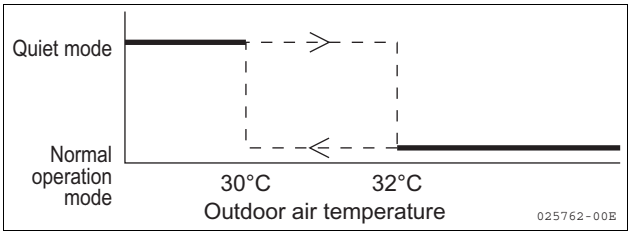

[Heating]

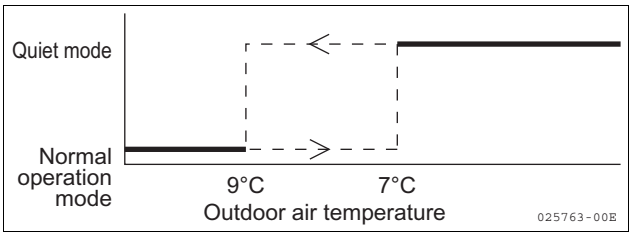

[Super-quiet mode]

The unit keeps running in the quiet mode, regardless of the outdoor air temperature.

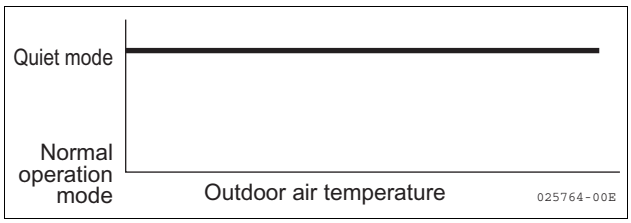

[Disabling the quiet mode via external contact input]

To disable the quiet mode via external contact input, you can use the onboard checker of the main circuit board to set memory switch CH2- No.7 to the ON position.

Memory switch CH2-No.7	External contact input	Quiet mode
OFF	Ignored	Depends on the settings of memory switches CH1-No.4 to No.7.
ON	OFF	Depends on the settings of memory switches CH1-No.4 to No.7.
	ON	Disabled (normal operation mode)

[How to connect the external contact input]

Connect the optional external contact harness to CN23 of the main circuit board to form a contact input circuit.

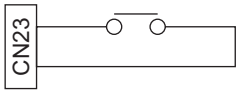

3. Actuator Control

3.1 Electric Motor Operated Valve Control

■ **EV1, SV8**

[Cooling]

- Adjusts the refrigerant amount in the condenser to the optimal level.
- SV8 is closed (turned OFF).

[Cooling main, heating main A]

- Adjusts the refrigerant amount in the condenser to the optimal level.
- Adjusts the fluid pressure to the optimal level.

[Heating, heating main B]

- These valves are normally controlled to the target of SHS2 = 7°C so that refrigerant flows into the evaporator at an optimal flow rate.
- When the discharge temperature exceeds 100°C, these valves are controlled to the minimum target of SHS5 = 4°C.

■ **EV2**

[Cooling/heating, heating main B]

- Adjusts the refrigerant remaining in the accumulator and the return amount of the refrigerating machine oil.

∗ The same as the EV1operation.

[Cooling main, heating main A]

- Normal, fully closed opening degree

■ **EV3**

[Cooling]

- This valve is opened when the cooling water temperature is low and the low-side pressure falls below the low-side pressure set-point during transition.
- When the engine is running at the minimum speed and yet the high-side pressure is higher than the predetermined level, hot gas is bypassed to lower the high-side pressure.

[Cooling main, heating main A]

- When the high-side pressure is higher than the high-side pressure set-point, hot gas is bypassed to lower the high-side pressure.
- When the low-side pressure is lower than the low-side pressure set-point, hot gas is bypassed to raise the low-side pressure.

[Heating, heating main B]

- When the engine is running at the minimum speed and yet the high-side pressure rises, the opening degree of this valve is adjusted to maintain the high-side pressure at the target. ("Overload Capacity" control function in basic control)

■ **EV4**

[Cooling/heating]

- The opening degree of this valve is adjusted to cool the liquid refrigerant in the SC receiver by keeping SHS4 at the SC receiver outlet at a constant level.
- When the discharge temperature exceeds 105°C, liquid is injected into the intake side.

[Cooling]

- Keeps SH at the SC receiver outlet at a constant level.
- When the engine is running at the minimum speed and yet the low-side pressure is lower than the low-side pressure set-point, keeps the low-side pressure at a constant level.

[Cooling main, heating main A]
- Keeps SH at the SC receiver outlet at a constant level.
- When the low-side pressure is lower than the low-side pressure set-point, keeps the low-side pressure at a constant level.

[Heating, heating main B]
- Keeps SH at the SC receiver outlet at a constant level.
- These valves are normally controlled to the target of SH3 = 20°C so that refrigerant flows into the waste heat recovery heat exchanger at an optimal flow rate.
- When the discharge temperature exceeds 100°C, these valves are controlled to the minimum target of SH = 7°C.

■ EV5
[Cooling]
- When the engine is running at the minimum speed and yet the low-side pressure is lower than the low-side pressure set-point, the waste heat recovery heat exchanger is used as an evaporator. In this case, the opening degrees of these valves are adjusted to keep the low-side pressure at a constant level.

[Cooling main, heating main A]
- When the low-side pressure is lower than the low-side pressure set-point, keeps the low-side pressure at a constant level.

[Heating, heating main B]
- These valves are normally controlled to the target of SHS3 = 20°C so that refrigerant flows into the waste heat recovery heat exchanger at an optimal flow rate.
- When the discharge temperature exceeds 100°C, these valves are controlled to the minimum target of SHS5 = 7°C.

■ EV6
[All modes]
- Adjusts the compressor oil return temperature to the optimal value.

■ EV7
[Heating, heating main B]
- When the fluid pressure is higher than the fluid pressure set-point, adjusts the fluid pressure by making the receiver gas flow to the low pressure side.

■ EV3A
[Cooling, cooling main, heating main A]
- If the high pressure cannot be maintained at the pressure set-point, synchronizes with SV3A and 3B to maintain the high pressure.

■ EV3B
[Cooling main, heating main A, heating, heating main B]
- When the fluid pressure drops and reduced performance of the cooling indoor unit occurs, maintains the receiver outlet pressure.

■ MV (water motor-operated valve)
[Cooling, cooling main, heating main A, heating, heating main B]
- Adjusts the evaporation amount by setting the refrigerant amount that flows into the waste heat recovery heat exchanger to the optimal level.

■ SV1
[Cooling]
- This valve is closed (turned OFF).

[Cooling main, heating main A, heating, heating main B]
- When the engine is running at the minimum speed and yet the high-side pressure is higher than the high-side pressure set-point, hot gas is bypassed to lower the high-side pressure.

■ Four-way valve
[Cooling]
- This valve is energized (turned ON).
  ∗ (Cooling) This valve is not energized during circuit reverse control (turned OFF).

[Heating]
- This valve is not energized (turned OFF).
  ∗ This valve is energized during defrosting (turned ON).

■ SV3, SV4
[All modes]
- Compressor oil return valve.

■ SV6
[Cooling]
- Adjusts the refrigerant amount in the condenser to the optimal level. Synchronized with EV1.

[Heating]
- This valve is closed (turned OFF).

■ SV7, SV9
[All modes]
- Adjusts the compressor oil return amount.

■ SV10
[Cooling]
- Reduces the intake pipe resistance.

[Heating]
- This valve is closed (turned OFF).

■ SV12
[All modes]
- Adjusts the compressor oil return temperature to the optimal level.

■ SV13
[Heating, heating main B]
- When the fluid pressure is higher than the fluid pressure set-point, adjusts the fluid pressure by making the receiver gas flow to the low pressure side.

■ SV31
[Cooling]
- This valve is closed (turned ON).

[Cooling main, heating main A, heating, heating main B]
- Sends discharge gas to the heating indoor unit.
- During oil return, recovers refrigerating machine oil by switching from the discharge gas pipe to the low pressure gas pipe.

■ SV32
[Cooling]
- Switches from the discharge gas pipe to the low pressure gas pipe.

[Cooling main, heating main A, heating, heating main B]
- This valve is closed (turned OFF).
- During oil return, recovers refrigerating machine oil by switching from the discharge gas pipe to the low pressure gas pipe.

■ SV37
[Cooling, cooling main, heating main A, heating, heating main B]
- Switches from the intake gas line to the circuit that passes through the waste heat recovery heat exchanger.

■ SV3A/3B/3C/3D/3E/3F
[Cooling, cooling main, heating main A, heating, heating main B]

SV	Cooling	Cooling main, heating main A	Heating, heating main B
SV3A	This valve is open (turned ON).	This valve is open (turned ON).	This valve is closed (turned OFF).
SV3B	This valve is open (turned ON).	This valve is open (turned ON).	This valve is closed (turned OFF).
SV3C	This valve is open (turned ON).	This valve is closed (turned OFF).	This valve is closed (turned OFF).
SV3D	This valve is open (turned ON).	This valve is closed (turned OFF).	This valve is closed (turned OFF).
SV3E	This valve is closed (turned OFF).	This valve is closed (turned OFF).	This valve is open (turned ON).
SV3F	This valve is closed (turned OFF).	This valve is open (turned ON).	This valve is open (turned ON).

∗ Depending on the control, may turn ON/OFF.

■ SV3G/3H
[Cooling]
- Adjusts the supercooling degree of the condenser to the optimal level.

[Cooling main, heating main A]
- Adjusts the supercooling degree of the condenser to the optimal level.
- Adjusts the fluid pressure to the optimal level.

[Heating, heating main B]
- This valve is closed (turned OFF).

■ Throttle valve
[All modes]
- When the engine starts up:
  The throttle valve turns from the standby opening degree (30 pulses) to the start-up opening degree (120 pulses).
- After startup
  The throttle valve opening degree is controlled to maintain the engine at the target speed.
- When the engine stops:
  The throttle valve temporarily fully closes (0 pulse) at the same time as the gas solenoid valve, and then returns to the standby opening degree.

■ Fuel control valve
[All modes]
- The opening degree of the control valve is adjusted depending on the engine load.

3.2 Pump Control

■ **Cooling water pump**

[All modes]

- The cooling water pump is always running while the unit is operating.

3.3 Fan Control

■ **Fans**

[Cooling, cooling main, heating main A]

- The fan speed is reduced when the high-side pressure is lower than the target high-side pressure.
- The fan speed is increased when the cooling water temperature has risen beyond 90°C as the result of reducing the fan speed.
- The fan speed is reduced when the unit enters the quiet mode.

[Heating, heating main B]

- When the low-side pressure is higher than the pressure set-point, the fan speed is controlled to adjust the pressure.
- The fan speed is increased when the cooling water temperature has risen beyond 90°C as the result of reducing the fan speed.
- The fans are stopped when defrosting is performed.
- The fan speed is reduced when the unit enters the quiet mode.

3.4 Heater Control

■ **Compressor heater, oil return heater**

[All modes]

- These heaters are always running (turned ON) while the system is stopped.

■ **Oil separator heater, accumulator heater**

[All modes]

- ON/OFF operation while stopped.

3.5 Starter Control

[All modes]

- If the engine speed reaches 800 min^{-1} or higher as the result of turning ON the starter, then the starter is turned OFF.
- If the engine speed is lower than 800 min^{-1} with the starter turned ON, then the system attempts to start the engine by turning ON/OFF the starter in the following cyclic pattern: ON [10 seconds] → OFF [10 seconds] → ON [6 seconds] → OFF [10 seconds] → ON [6 seconds]
- If no speed pulse is detected within 3 seconds of turning ON the starter, the system waits for 4 minutes before the next attempt.

3.6 Compressor Clutch Control

[All modes]

- The compressor clutch is turned ON 3 seconds before the starter is turned ON.
- It is turned ON/OFF in accordance with step commands for capacity.

3.7 Ignition Timing Control

[Speed sensor]
The speed sensor system is designed to control the ignition timing using two sensors: cam pulse and crank pulse.

[Ignition scheme]
The system counts the speed pulses transmitted from the crank pulse sensor based on the speed pulses transmitted from the cam pulse sensor, and uses the "ignition timing map" to perform ignition.

[Ignition timing control]
Ignition timing control works by advancing the ignition timing as the engine speed increases so that the engine can run efficiently. Ignition timings advanced in accordance with the engine speed provide ignitions at a certain angle (referred to as the "ignition timing advance value") that exists immediately before the top dead center of the compression stroke viewed from the crank shaft axial direction. This "ignition timing advance value" increases as the engine speed rises, and it may also vary depending on the engine model, engine load, and some other conditions.

Part 4
Troubleshooting

1. Troubleshooting the Outdoor Unit 110
   1.1 Error Codes 110
   1.2 How to Use the Checker on PCB 113
   1.3 RUN Mode.....115
   1.4 STOP Mode.....121
   1.5 Main Operations in Servicing 125
2. Flow Charts for Troubleshooting 128
   2.1 Problems without Error Codes 128
   2.2 Problems with Error Codes 131

1. Troubleshooting the Outdoor Unit

1.1 Error Codes

Your Yanmar Gas Heat Pump system constantly monitors its components for any errors. In the event that an error has occurred in a unit, the system automatically stops that unit.
When an error occurs, the remote controller connected to the indoor unit notifies you of the error by displaying the corresponding error code while flashing the run lamp and inspection indicator. The error codes appears also on the "hour meter" on the outdoor unit's control circuit board. When normal, the "hour meter" displays operating hours.

Table 4.1/ Error code table

Indoor Unit system					Error
Code displayed on outdoor unit	Run lamp	Inspection indicator	Unit No.	Code displayed on remote controller	
—	Blinking	Blinking	Blinking	A0	Indoor Unit - External Protection Device Failure
—	Blinking	Blinking	Blinking	A1	Indoor Unit - P Board Assembly Failure / EEPROM Misconfigured
—	On	Off	Blinking	A1	Indoor Unit - P Board Assembly Failure
—	Blinking	Blinking	Blinking	A3	Indoor Unit - Drain Level System Failure
—	Blinking	Blinking	Blinking	A6	Indoor Unit - Fan Lock
—	On	Off	Blinking	A7	Indoor Unit - Louver Motor (MA) Failure
—	On	Blinking	Blinking	A7	Indoor Unit - Louver Motor Failure
—	Blinking	Blinking	Blinking	A9	Indoor Unit - Electronic Expansion Valve Drive Failure
—	On	Off	Blinking	AF	Indoor Unit - Abnormal Drain
—	On	Off	Blinking	AH	Indoor Unit - Dust Collector Failure
—	Blinking	Blinking	Blinking	AJ	Indoor Unit - Capacity Setting Incorrect
—	Blinking	Blinking	Blinking	C1	Indoor Unit - Fan P Board / Adaptor P Board - Control P Board Transmission Failure
—	Blinking	Blinking	Blinking	C4	Indoor Unit - Liquid Pipe Thermistor Fault (contact failure, disconnected, shorted, faulty)
—	Blinking	Blinking	Blinking	C5	Indoor Unit - Gas Pipe Thermistor Fault (contact failure, disconnected, shorted, faulty)
—	Blinking	Blinking	Blinking	C6	Indoor Unit - Fan P Board - Control P Board Misconfigured
—	Blinking	Blinking	Blinking	C9	Indoor Unit - Inlet Air Thermistor Fault (contact failure, disconnected, shorted, faulty)
—	Blinking	Blinking	Blinking	CA	Indoor Unit - Blow-Out Air Thermistor Fault (contact failure, disconnected, shorted, faulty)
—	On	Off	Blinking	CE	Indoor Unit / Person Detection / Floor Temperature Detection Sensor Failure
—	On	Off	Blinking	CJ	Indoor Unit - Remote Control Sensor Failure
E0	Blinking	Blinking	Blinking	E0	Engine Fails To Start Up
E1	Blinking	Blinking	Blinking	E1	Engine Overspeed
E2	Blinking	Blinking	Blinking	E2	Engine Stall
E3	Blinking	Blinking	Blinking	E3	Oil Pressure Too Low
E4	Blinking	Blinking	Blinking	E4	Abnormal Cooling Water Temperature
E6	Blinking	Blinking	Blinking	E6	Abnormal Discharge Temperature
E7	Blinking	Blinking	Blinking	E7	Abnormal High-Side Pressure
E9	Blinking	Blinking	Blinking	E9	Abnormal Low-Side Pressure
EA	Blinking	Blinking	Blinking	EA	Abnormal EEPROM
EH	Blinking	Blinking	Blinking	EH	Software Version Mismatch / Circuit Board Mismatch
F0	Blinking	Blinking	Blinking	F0	Starter System Failure
F2	Blinking	Blinking	Blinking	F2	Outdoor Fan Failure
F3	Blinking	Blinking	Blinking	F3	Oil Pressure Switch Failure
F4	Blinking	Blinking	Blinking	F4	Cooling Water Temperature Sensor Disconnected / Shorted

Indoor Unit system					Error
Code displayed on outdoor unit	Run lamp	Inspection indicator	Unit No.	Code displayed on remote controller	
F6	Blinking	Blinking	Blinking	F6	Discharge Temperature Sensor Disconnected / Shorted
F7	Blinking	Blinking	Blinking	F7	Abnormal Engine Room Temperature
F9	Blinking	Blinking	Blinking	F9	Short of Refrigerant
FH	Blinking	Blinking	Blinking	FH	Compressor Oil Detected Too Low
FJ	Blinking	Blinking	Blinking	FJ	Abnormal High-Side Differential Pressure
H0	Blinking	Blinking	Blinking	H0	Misfire Detected
H1	Blinking	Blinking	Blinking	H1	Clutch Failure
H6	Blinking	Blinking	Blinking	H6	Indoor Unit Electronic Expansion Valve Failure
J1	Blinking	Blinking	Blinking	J1	Air-Fuel Ratio Controller Failure
J2	Blinking	Blinking	Blinking	J2	Intake Air Temperature Sensor 1 Disconnected / Shorted
J3	Blinking	Blinking	Blinking	J3	Outdoor Air Temperature Sensor Disconnected / Shorted
J5	Blinking	Blinking	Blinking	J5	Outdoor Unit Electronic Expansion Valve Failure
J6	Blinking	Blinking	Blinking	J6	Oil Return Solenoid Valve Failure
J7	Blinking	Blinking	Blinking	J7	High-Side Pressure Sensor System Failure
J8	Blinking	Blinking	Blinking	J8	Exhaust Temperature Sensor Disconnected
J9	Blinking	Blinking	Blinking	J9	Low Pressure Side Sensor Disconnected / Shorted
JA	On	Off	Blinking	JA	Compressor Automatic Emergency Run (during continued running)
JA	Blinking	Blinking	Blinking	JA	Compressor Automatic Emergency Run
JH	Blinking	Blinking	Blinking	JH	Pressure Sensor Failure
JJ	Blinking	Blinking	Blinking	JJ	Oil Temperature Sensor Disconnected / Shorted
JF	Blinking	Blinking	Blinking	JF	Receiver Temperature Sensor System Failure
L1	Blinking	Blinking	Blinking	L1	Abnormal Exhaust Temperature
L8	On Off	On	Off	Off	Periodic Inspection Reminder (Note: This is not an error message) In the case of 200 or less hours remaining before the next periodic inspection
L8	On Off	On	Blinking	L8	Periodic Inspection Reminder (Note: This is not an error message) In case the next periodic inspection time has passed
LE	Blinking	Blinking	Blinking	LE	Starter Relay Failure
LF	Blinking	Blinking	Blinking	LF	BS Unit Circuit Switch Failure
—	On Off	Blinking	Blinking	M1	Centralized Controller P Board Failure
—	On Off	Blinking	Blinking	M8	Transmission Failure between Centralized Controllers
—	On Off	Blinking	Blinking	MA	Centralized Controller Mismatch
—	On Off	Blinking	Blinking	MC	Centralized Controller Address Incorrect
P0	Blinking	Blinking	Blinking	P0	Too Many Indoor Units Connected
P3	Blinking	Blinking	Blinking	P3	Total Indoor Unit Capacity Too Large
U2	Blinking	Blinking	Blinking	U2	Inter-CPU Communication Failure / Software Mismatch / ROM Abnormal
U3	Blinking	Blinking	Blinking	U3	Inter-Unit Communication Failure
U4	Blinking	Blinking	Blinking	U4	Outdoor/Indoor Unit Transmission Failure
—	Blinking	Blinking	Blinking	U5	Transmission Failure between Remote Control and Indoor Units
—	Blinking	Blinking	Blinking	U7	External Control Adaptor Failure
—	Blinking	Blinking	Off	U8	Transmission Failure between Master and Slave Remote Control Units (Slave Remote Control Unit Failure)

Indoor Unit system					Error
Code displayed on outdoor unit	Run lamp	Inspection indicator	Unit No.	Code displayed on remote controller	
—	Blinking	Blinking	Blinking	U9	Failure of Another Unit in the Same System
UA	Blinking	Blinking	Blinking	UA	Indoor Unit and Remote Control Mismatch
—	On	Off	On	UC	Centralized Control Address Conflict
—	Blinking	Blinking	Blinking	UE	Transmission Failure between Indoor Unit and Centralized Controller
—	Blinking	Blinking	Blinking	UF	System Not Configured
—	Blinking	Blinking	Blinking	UH	System Failure
—	Blinking	Blinking	Blinking	UJ	Optional Equipment Electrical Component Failure

Caution: Depending on the error content, a service indication may not appear on the remote controller and the unit may continue operation, but inspection and repair are required. When error codes are displayed, be sure to contact your dealer.
∗ 1.The inspection indicator blinks in 1-second intervals.
∗ 2.The inspection indicator blinks in 4-second intervals.

1.2 How to Use the Checker on PCB

Fig. 4.1/ Checker on PCB

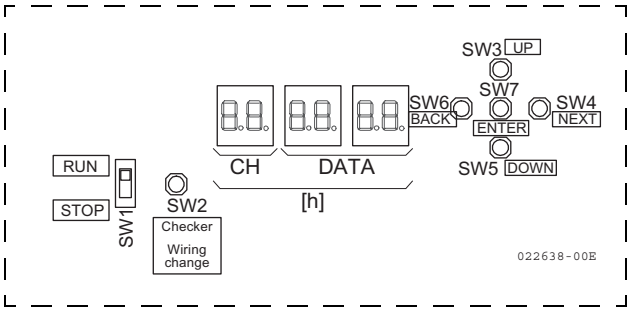

Caution
- Wipe soil, oil and water from your hands before operating pushbuttons and switches on the PCB. Oil and water may cause electric shocks or the PCB to malfunction.
- Be sure to operate pushbuttons with your hands, not with a ballpoint pen or other tools. Failure to do so will cause the PCB to malfunction.

Caution [Sleep mode of the Checker on PCB]
The operation of the Checker on PCB may not be possible as sleep mode activates 10 minutes after power activation or previous operation.
If operation is not possible (due to sleep mode), press "SW2 checker wiring change" once to release the sleep mode and enable operation.
(Note if SW2 is held down, the wiring change operation is activated.)

1.2.1 Initial Display after the Outdoor Unit has been Powered ON

Fig. 4.2/ Flow of hour meter display after power ON

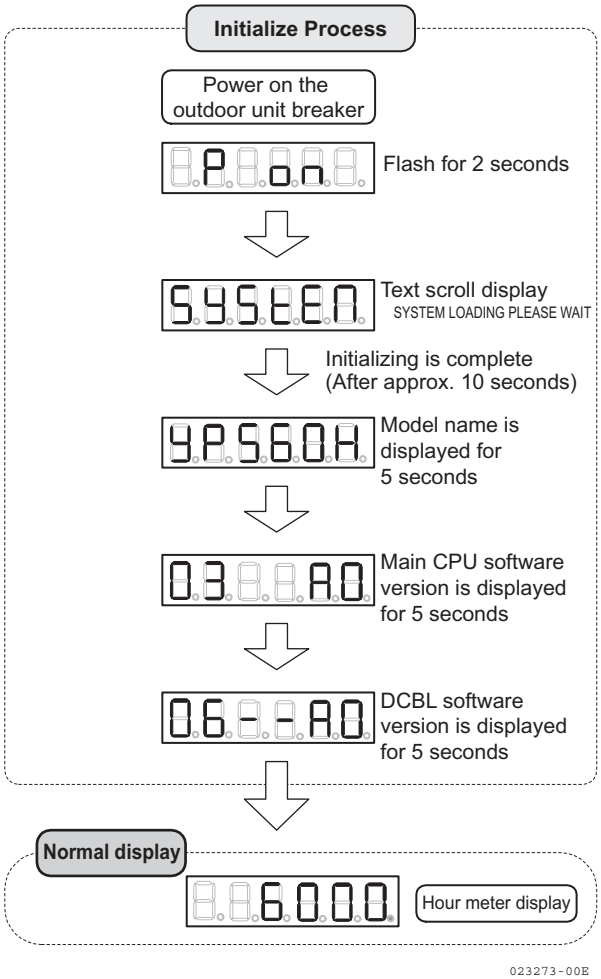

1.2.2 Hour Meter / Error Code Display

The hour meter (7-segment meter) on the PCB displays the total operated hours time during normal operation. When an error or fault occurs, the total operated hours and error code are displayed alternately and repeatedly at one second intervals.

Fig. 4.3/ Example of hour meter display3-112

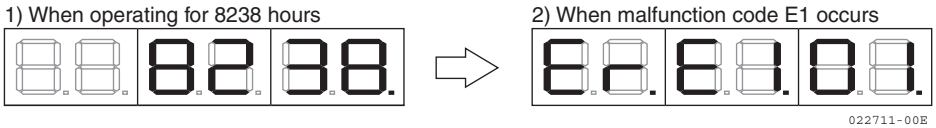

When the total operated hours are displayed:

(UP) : Holding down this button (for 3 seconds) displays the main CPU software version.
: Holding down this button (for longer than 3 seconds) displays the EEPROM serial number.

(DOWN) : Holding down this button (for 3 seconds) displays the DCBL software version.
: Holding down this button (for longer than 3 seconds) displays the Ignition CPU software version.

(BACK) : Holding down this button (for 3 seconds) displays the model. (Type is converted into two-digit code as shown below.)

Model	GYEQ
Display	AF

: Holding down this button (for longer than 3 seconds) displays the status of communication with the indoor units and the number of connected indoor units.

(ENTER) : Holding down this button (for longer than 3 seconds) clears the alarm condition.

(NEXT) : Pressing this button activates the RUN mode.

- Communication status display available when indoor units are connected:
  The dot in the 6th digit (leftmost) indicates the status of communication with indoor units and flashes once when the connection is established.

1.2.3 How to Use the Checker on PCB

You can use the onboard switch SW1 to switch the checker function between the RUN and STOP modes.

Table 4.2/ SW1 and pushbutton functions

Button name	Function
UP	Selects a different channel (CH)
DOWN	Selects a different channel (CH)
NEXT	Moves to the next level
BACK	Returns to the previous level
ENTER	Saves settings / (moves to the next menu)
ENTER (hold down)	Clears the settings or makes them editable
SW1	Switches between RUN and STOP modes

Fig. 4.4/ Navigation with the switches

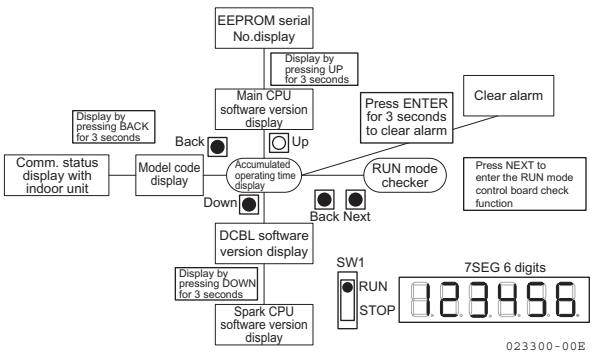

1.3 RUN Mode

- When you press (NEXT) or (ENTER) (hereafter only (NEXT) is indicated for simplicity) button while SW1 is in the RUN position and the total operated hours are displayed, RUN mode is activated.
  ("1._____" appears on the LCD.)
- When terminating the RUN mode, press the (BACK) button repeatedly until the total operated hours are displayed. ([Caution] Be sure to operate as above when exiting from RUN mode.)
- RUN mode has four levels from 1 to 4. Use the (BACK) and (NEXT) buttons to shift between these levels.
- You can switch the channels using the (UP) and (DOWN) buttons.

Table 4.3/ List of RUN mode menu items

	Level 1	Level 2	Level 3	Level 4
CH items	1. Outdoor unit	01. Outdoor unit data	Outdoor unit data display	
		02. Actuator operation status 1	Actuator operation status 1 display	
		03. Actuator operation status 2	Actuator operation status 2 display	
		04. Not used		
		05. Not used		
	2. Special operation	Special operation mode	Special operation mode setting	
	3. Indoor unit	01. Indoor unit detail	Indoor unit No.	Indoor unit information display
		02. Indoor unit thermostat ON status	Indoor unit thermostat ON status display	
		03. Indoor unit remote controller ON status	Indoor unit remote controller ON status display	
	4. Item display	01. ON/OFF unit (memory switch)	Each item	ON/OFF display
		02. Data Units	Item display	

∗ While in RUN mode, the display is automatically released from the checker five hours after the termination of the operation, and it returns to showing the total operated hours.

1.3.1 Outdoor Units

■ **Outdoor unit data display**

(1) Enter RUN mode, select CH [1] in Level 1 and press (NEXT) . (2) Select CH [01] in Level 2 and press (NEXT) . (3) When the CH **(Table 4.4)** of the desired data item is selected in Level 3, the data is displayed.

Table 4.4/ (List of outdoor unit data)

CH	Item	Content	CH	Item	Content
01	Current speed	min^{-1}	35	Circuit board temperature	°C
02	Target speed	min^{-1}	36	Not used	
03	Speed set-point	min^{-1}	37	(Reserved for future use)	
04	Throttle valve	pulse	38	(Reserved for future use)	
05	Fuel control valve	pulse	39	Not used	
06	Mode-flag	4th digit: 0, normal mode; 1, checker mode	40	(Reserved for future use)	
		3rd digit: 0, stop; 1, operation	41	Not used	
		2nd digit: 0, blowing; H, heating; C, cooling	42	Not used	
		1st digit: 0, auto; 2, manual	43	Not used	
07	EV1	pulse	44	SHS1	°C
08	EV2	pulse	45	SHS2	°C
09	EV3	pulse	46	SHS3	°C
10	EV4	pulse	47	SHS4	°C
11	EV5	pulse	48	SHD1	°C
12	EV6	pulse	49	SHD2	°C
13	Water motor valve	pulse	50	SHO1	°C
14	Fan 1	min^{-1}	51	SHO2	°C
15	Fan 2	min^{-1}	52	(Reserved for future use)	
16	Fan 3	min^{-1}	53	High pressure converted temperature 1	°C
17	Cooling water pump	min^{-1}	54	(Reserved for future use)	
18	Cooling water temperature	°C	55	Low pressure converted temperature	°C
19	High-side pressure 1	MPa	56-59	Not used	
20	Low-side pressure	MPa	60	Receiver temperature 31	°C
21	Outdoor air temperature	°C	61	Intake temperature 5	°C
22	Exhaust temperature	°C	62	Oil temperature 3	°C
23	Discharge temperature 1	°C	63	Oil temperature 4	°C
24	Discharge temperature 2	°C	64	(Reserved for future use)	
25	Intake temperature 1	°C	65	SHS5	°C
26	Intake temperature 2	°C	66	SHO3	°C
27	Intake temperature 3	°C	67	SHO4	°C
28	Intake temperature 4	°C	68	(Reserved for future use)	
29	Oil temperature 1	°C	69	High-side pressure 2	MPa
30	Oil temperature 2	°C	70	High-side pressure 3	MPa
31	(Reserved for future use)		71	High-side pressure 4	MPa
32	(Reserved for future use)		72	EV3A	pulse
33	(Reserved for future use)		73	EV3B	pulse
34	(Reserved for future use)		74	EV7	pulse

∗ If your selected channel contains an item that is not supported by the unit model, the LCD displays nothing or "-".

Fig. 4.5/ (Content of outdoor unit segment display)

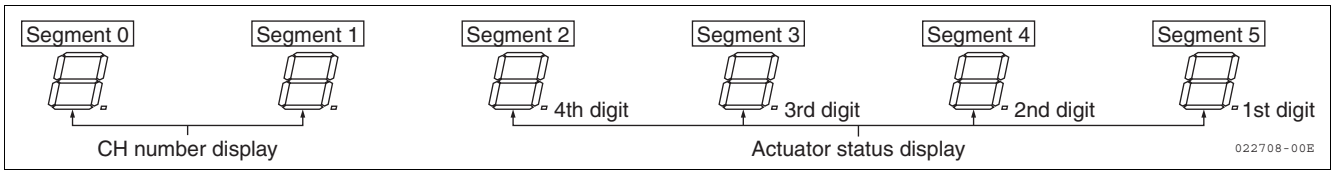

■ **Actuator operation status display**

(1) Enter RUN mode, select CH [1] in Level 1 and press (NEXT) . (2) Select CH [02] or [03] in Level 2 and press (NEXT) . (3) When the CH **(Table 4.5, Table 4.6)** of the desired actuator is selected in Level 3, the operation status is displayed.

Table 4.5/ (List of actuator operation status 1) Select CH [02] in Level 2

CH	No.	Content	CH	No.	Content
01	1	High pressure SW1/SW2	04	1	(Reserved for future use)
	2	(Reserved for future use)		2	(Reserved for future use)
	3	(Reserved for future use)		3	(Reserved for future use)
	4	(Reserved for future use)		4	(Reserved for future use)
	5	(Reserved for future use)		5	(Reserved for future use)
	6	(Reserved for future use)		6	(Reserved for future use)
	7	(Reserved for future use)		7	(Reserved for future use)
	8	(Reserved for future use)		8	(Reserved for future use)
02	1	(Reserved for future use)	05	1	Heating/cooling
	2	(Reserved for future use)		2	Blowing/temperature control
	3	(Reserved for future use)		3	Option
	4	(Reserved for future use)		4	Snow sensor/quiet mode prevention switch
	5	(Reserved for future use)		5	(Reserved for future use)
	6	(Reserved for future use)		6	(Reserved for future use)
	7	(Reserved for future use)		7	(Reserved for future use)
	8	(Reserved for future use)		8	(Reserved for future use)
03	1	Oil pressure switch			
	2	M terminal			
	3	(Reserved for future use)			
	4	(Reserved for future use)			
	5	(Reserved for future use)			
	6	(Reserved for future use)			
	7	(Reserved for future use)			
	8	(Reserved for future use)			

∗ If your selected channel contains an item that is not supported by the unit model, the LCD displays nothing or "-".

Table 4.6/ (List of actuator operation status 2) Select CH [03] in Level 2

CH	No.	Content	CH	No.	Content
01	1	Clutch 1	06	1	Starter
	2	Clutch 2		2	Gas valve 1
	3	Compressor heater 1		3	Gas valve 2
	4	Compressor heater 2		4	(Reserved for future use)
	5	Four-way valve 1		5	Starter transformer cut-off relay
	6	Oil separator heater		6	Block heater
	7	Accumulator heater		7	Exhaust drain heater
	8	Oil return heater		8	(Reserved for future use)
02	1	SV1	07	1	(Reserved for future use)
	2	SV2		2	(Reserved for future use)
	3	SV3		3	(Reserved for future use)
	4	SV4		4	(Reserved for future use)
	5	(Reserved for future use)		5	(Reserved for future use)
	6	SV6		6	(Reserved for future use)
	7	SV7		7	(Reserved for future use)
	8	SV8		8	(Reserved for future use)
03	1	SV13	08	1	(Reserved for future use)
	2	(Reserved for future use)		2	(Reserved for future use)
	3	(Reserved for future use)		3	(Reserved for future use)
	4	SV12		4	(Reserved for future use)
	5	SV9		5	(Reserved for future use)
	6	(Reserved for future use)		6	(Reserved for future use)
	7	(Reserved for future use)		7	(Reserved for future use)
	8	(Reserved for future use)		8	(Reserved for future use)
04	1	SV31	09	1	Run signal output (Note 1)
	2	SV32		2	Fault signal output (Note 1)
	3	SV3A		3	Heating signal output (Note 1)
	4	SV3B		4	(Reserved for future use)
	5	SV3C		5	(Reserved for future use)
	6	SV3D		6	(Reserved for future use)
	7	SV37		7	(Reserved for future use)
	8	SV3E		8	(Reserved for future use)
05	1	(Reserved for future use)			
	2	(Reserved for future use)			
	3	(Reserved for future use)			
	4	(Reserved for future use)			
	5	(Reserved for future use)			
	6	SV3H			
	7	SV3G			
	8	SV3F			

∗ If your selected channel contains an item that is not supported by the unit model, the LCD displays nothing or "-".
(Note 1) The signal type can be selected by the memory switch setting.

Fig. 4.6/ Content of actuator status segment display

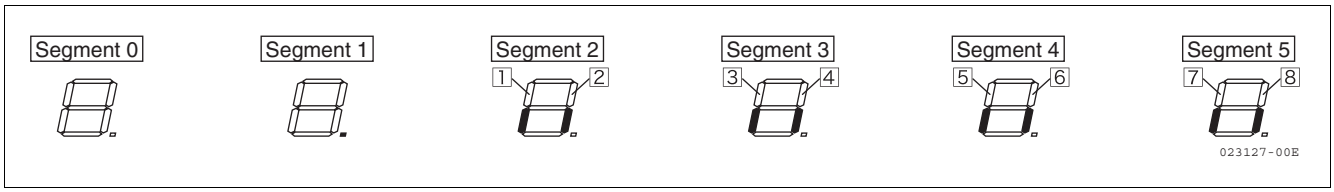

∗ The numbers in the table indicate the segments 1 to 8 in the above figure.
When an actuator is ON, the corresponding segment lights.

1.3.2 Special Operation

(1) Enter RUN mode, select CH [2] in Level 1 and press (NEXT) . (2) Select the CH of the desired mode **(Table 4.7)** in Level 2 and press (NEXT) . (3) Change the setting (such as ON/OFF) using (UP) and (DOWN) , and then press (ENTER) to save the new value. Press (ENTER) again to disable the setting.
(Setting is enabled: display is lit/setting is disabled: display blinks)
When this setting is enabled, it is not disabled unless it is disabled manually or the checker is terminated to display the total operated hours.

Table 4.7/ (List of special operation mode settings)

CH	Item	Content	
01	Forced thermostat instruction	ON/OFF	
02	Checker mode instruction	OFF: auto mode, ON: checker mode	
03	Operation mode instruction	OFF: auto mode, ON: manual mode	
04	Actual engine speed	Minimum speed to maximum speed (min^{-1})	Setting is available only in manual mode
05	Clutch 1	ON/OFF	
06	Clutch 2	ON/OFF	
07/08	(Reserved for future use)		
09	(Reserved for future use)		Only one of the functions can be turned ON at a time; you cannot turn ON two or more functions at the same time.
10	Pump down for maintenance (Note 1)	ON/OFF	
11	Refrigerant wrong charging emergency mode (Note 1)	ON/OFF	
12/13	(Reserved for future use)		
14	Refrigerant recharging mode (Note 1)	ON/OFF	

∗ If your selected channel contains an item that is not supported by the unit model, the LCD displays nothing or "-".
(Note 1) Power reset is required after the operation is terminated (OFF).

1.3.3 Item Display

■ **ON/OFF unit (memory switch)**

(1) Enter RUN mode, select CH [4] in Level 1 and press (NEXT) . (2) Select CH [01] in Level 2 and press (NEXT) . (3) Select the CH **(Table 4.8)** of the desired item in Level 3 and press (NEXT) . (4) When the CH of the desired item No. **(Table 4.8)** is selected in Level 4, the setting status is displayed.

Table 4.8/ (List of ON/OFF unit items)

CH	No.	Item	Content							
01	4	Quiet cooling mode	OFF	Normal operation mode (factory default)	ON	Quiet mode operation	ON	Super-quiet mode operation		
	5		OFF		OFF		ON			
	6	Quiet heating mode	OFF	Normal operation mode (factory default)	ON	Quiet mode operation	ON	Super-quiet mode operation		
	7		OFF		OFF		ON			
02	7	Quiet mode external signal	ON: quiet mode turned ON/OFF via an external signal (option) / OFF: normal (factory default: OFF)							
03	3	High static pressure support	ON: enabled / OFF: disabled (factory default: OFF)							
04	4	Energy saving cooling mode	ON: enabled / OFF: disabled (factory default: OFF)							
	6	Energy saving heating mode	ON: enabled / OFF: disabled (factory default: OFF)							
09	0	Defrosting	OFF	Normal defrosting (factory default)	ON	Reinforced defrosting + stop defrosting			OFF	Stop defrosting only
	1		OFF		OFF				ON	
	2	Reinforced defrosting interval	OFF	4 hours (factory default)	ON	Always not established	OFF	2 hours	ON	8 hours
	3		OFF		OFF		ON		ON	
10	2	Air Guard setting	OFF: no / ON: yes (factory default: OFF)							
	4	Heating eccentric flow setting	OFF: disabled / ON: enabled (factory default: OFF)							
13	4	Periodic inspection reminder	OFF	Reminder: ON Energy saving: OFF (factory default)	ON	Reminder: OFF Energy saving: OFF	OFF	Reminder: ON Energy saving: OFF	ON	Do not use this setting.
	5		OFF		OFF		ON		ON	
14	0	Snow sensor support	OFF: disabled / ON: enabled (factory default: OFF)							
	1	Snow sensor wait time setting (in minutes)	OFF	50 (factory default)	ON	30	OFF	20	ON	10
	2		OFF		OFF		ON		ON	

∗ If your selected channel contains an item that is not supported by the unit model, the LCD displays nothing or "-".

∗ Items not listed above are not used.

■ **Data units**

(1) Enter RUN mode, select CH [4] in Level 1 and press (NEXT) . (2) Select CH [02] in Level 2 and press (NEXT) . (3) When the CH **(Table 4.9)** of the desired item is selected in Level 3, the data is displayed.

Table 4.9/ (List of ON/OFF unit items)

CH	Item
01	Elapsed time since last maintenance
02	Total operated hours
03	Number of on/off operations of system
04	Total time of controller energization

∗ If your selected channel contains an item that is not supported by the unit model, the LCD displays nothing or "-".

∗ Items not listed above are not used.

1.4 STOP Mode

- When the slide switch (SW1) is switched to STOP, the unit enters STOP mode.
- To exit from STOP mode, set SW1 to the RUN position so that the total operated hours are displayed.
  Note that the outdoor unit starts operation if the remote controller is in the operation mode when SW1 is shifted to RUN.
- STOP mode has five levels from 1 to 5. Use the (BACK) and (NEXT) buttons to shift between these levels.
- You can switch the channels using the (UP) and (DOWN) buttons.

Table 4.10/ List of STOP mode menu items

	Level 1	Level 2	Level 3	Level 4	Level 5
CH item	1. Alarm display	Alarm display	Alarm reset		
	2. Actuator check	With actuator check	Actuator check action		
	3. Configure items	01. ON/OFF unit (memory switch)	Each item	ON/OFF display	Item data update
		02. Not used			
	4. Alarm/warning history	Alarms/warnings	Among alarm/warning history Alternate display of alarm content		

∗ During STOP mode, the display is automatically returned to STOP twenty seconds after the termination of operation.

1.4.1 Alarm Display

Enter STOP mode, make sure that the display [1] (CH1: alarm display) is selected in Level 1, and press (NEXT) . The alarm code is displayed.
To clear the alarm condition, hold down (ENTER) for 3 seconds.

1.4.2 Actuator Check

(1) Enter STOP mode, select CH [2] in Level 1 and press (NEXT) . (2) Select the CH **(Table 4.11)** of the desired actuator in Level 2 and press (NEXT) . (3) Change the setting (such as ON/OFF) using (UP) and (DOWN) , and then press (ENTER) to save the new value. Press (ENTER) again to disable the setting. When you change the setting to "ON", the value of "ON" will be applied after a 5 second countdown.

Two or more actuators cannot be set to ON simultaneously.

Table 4.11/ (Actuator check list)

CH	Item	Content	CH	Item	Content	CH	Item	Content
01	Starter	ON/OFF (ON for 10 seconds)	27	EV6	ON(H)/OFF	54	Cooling water cooldown mode	ON/OFF
02	Not used	Do not turn OFF.	28	Water motor valve	ON/OFF	55	Outdoor unit evacuation mode	ON/OFF
03	Gas valve 1	ON/OFF	29	Throttle valve	ON(H)/OFF	56	Gas valve 1 & 2 simultaneous check	ON/OFF
04	Gas valve 2	ON/OFF	30	Fuel control valve	ON(H)/OFF	57-59	(Reserved for future use)	
05	Clutch 1	ON/OFF	31	(Reserved for future use)		60	(Reserved for future use)	
06	Clutch 2	ON/OFF	32	(Reserved for future use)		61	SV6	ON/OFF
07	Compressor heaters 1 / 2 / oil return heater	ON/OFF	33	(Reserved for future use)		62	SV7	ON/OFF
			34	(Reserved for future use)		63	SV8	ON/OFF
08	Not used		35	SV31	ON/OFF	64	SV9	ON/OFF
09	Oil separator heater	ON/OFF	36	SV32	ON/OFF	65	(Reserved for future use)	
10	Exhaust drain heater	ON/OFF	37	(Reserved for future use)		66	(Reserved for future use)	
11	Block heater	ON/OFF	38	(Reserved for future use)		67	Accumulator heater	ON/OFF
12	Four-way valve 1	ON/OFF	39	(Reserved for future use)		68	Not used	
13	SV1	ON/OFF	40	(Reserved for future use)		69	SV12	ON/OFF
14	SV2	ON/OFF	41	SV37	ON/OFF	70	SV12 and EV6 synchronized	ON/OFF
15	SV3	ON/OFF	42	(Reserved for future use)		71	SV13	ON/OFF
16	SV4	ON/OFF	43	(Reserved for future use)		72	SV3A	ON/OFF
17	(Reserved for future use)		44	(Reserved for future use)		73	SV3B	ON/OFF
18	Fan 1	ON (H) /OFF	45	(Reserved for future use)		74	SV3C	ON/OFF
19	Fan 2	ON (H) /OFF	46	(Reserved for future use)		75	SV3D	ON/OFF
20	Fan 3	ON (H) /OFF	47	(Reserved for future use)		76	SV3E	ON/OFF
21	Cooling water pump	ON (H) /OFF	48	(Reserved for future use)		77	SV3F	ON/OFF
22	EV1	ON (H) /OFF	49	(Reserved for future use)		78	SV3G	ON/OFF
23	EV2	ON (H) /OFF	50	(Reserved for future use)		79	SV3H	ON/OFF
24	EV3	ON (H) /OFF	51	Run signal output	ON/OFF	80	EV7	ON(H)/OFF
25	EV4	ON (H) /OFF	52	Fault signal output	ON/OFF	81	EV3A	ON(H)/OFF
26	EV5	ON (H) /OFF	53	Heating signal output	ON/OFF	82	EV3B	ON(H)/OFF

∗ If your selected channel contains an item that is not supported by the unit model, the LCD displays nothing or "-".

∗ If the fan rotates in reverse with high speed due to strong wind, it may not operate even with the setting ON. As such, the actuator check should be performed while blocking the wind to prevent the fan from rotating in reverse. However, note that in CH54 cooling water cool-down mode, the cooling water pump and all fans operate simultaneously regardless of reverse rotation.

1.4.3 Configure Items

■ **ON/OFF unit (memory switch)**

(1) Enter STOP mode, select CH [3] in Level 1 and press (NEXT) . (2) Select CH [01] in Level 2 and press (NEXT) . (3) Select the CH **(Table 4.12)** of the item you want to change in Level 3 and press (NEXT) . (4) Select the number **(Table 4.12)** of the item you want to change in Level 4 and press (NEXT) . (5) Change the ON/OFF value using (UP) and (DOWN) , then press (ENTER) to save the new value.

For CH55, No. 1, 2 and 3 are cleared when you set the value to "ON" and they are reset to OFF when you exit from STOP mode after setting them to ON. However, this does not mean the clear setting is disabled.

Reset the power supply after changing the settings.

Table 4.12/ (List of ON/OFF unit items)

CH	No.	Item	Content							
01	3	Support for facility-use/ outdoor air processing indoor unit	ON: when connecting a facility-use/outdoor air processing indoor unit / OFF: normal (factory default: OFF)							
	4	Quiet cooling mode (Note 1)	OFF	Normal operation mode (factory default)	ON	Quiet mode operation	ON	Super-quiet mode operation		
	5		OFF		OFF		ON			
	6	Quiet heating mode (Note 1)	OFF	Normal operation mode (factory default)	ON	Quiet mode operation	ON	Super-quiet mode operation		
	7		OFF		OFF		ON			
02	7	Quiet mode external signal	ON: quiet mode turned ON/OFF via an external signal (option) / OFF: normal (factory default: OFF)							
03	3	High static pressure support	ON: enabled / OFF: disabled (factory default: OFF)							
04	4	Energy saving cooling mode (Note 1)	ON: enabled / OFF: disabled (factory default: OFF)							
	6	Energy saving heating mode (Note 1)	ON: enabled / OFF: disabled (factory default: OFF)							
09	0	Defrosting	OFF	Normal defrosting (factory default)	ON	Reinforced defrosting + stop defrosting			OFF	Stop defrosting only
	1		OFF		OFF				ON	
	2	Reinforced defrosting interval	OFF	4 hours (factory default)	ON	Always not established	OFF	2 hours	ON	8 hours
	3		OFF		OFF		ON		ON	
10	2	Air Guard setting	OFF: no / ON: yes (factory default: OFF)							
	4	Heating eccentric flow setting (Note 4)	OFF: disabled / ON: enabled (factory default: OFF)							
13	4	Periodic inspection reminder	OFF	Reminder: ON / Energy saving: ON (factory default)	ON	Reminder: OFF Energy saving: OFF	OFF	Reminder: ON Energy saving: OFF	ON	Do not use this setting.
	5		OFF		OFF		ON		ON	
14	0	Snow sensor support (Note 3)	OFF: disabled / ON: enabled (factory default: OFF)							
	1	Snow sensor wait time setting (in minutes)	OFF	50 (factory default)	ON	30	OFF	20	ON	10
	2		OFF		OFF		ON		ON	
55	1	Clear GVM initial correction amount	ON: clear / OFF: normal (normally OFF: turned ON only when clearing the value.)							
	2	Clear GVM aging correction amount	ON: clear / OFF: normal (normally OFF: turned ON only when clearing the value.)							
	3	Clear elapsed time since last maintenance (Note 2)	ON: clear / OFF: normal (normally OFF: turned ON only when clearing the value.)							

∗ If your selected channel contains an item that is not supported by the unit model, the LCD displays nothing or "-".

∗ Items not listed above are not used. Do not attempt to change any unlisted settings.

(Note 1)Cooling/heating performance is more or less sacrificed for the quiet mode or energy saving mode, possibly resulting in "Cannot Get Cool/Warm" complaints from end users.

(Note 2)The GVM aging correction amount is cleared at the same time.

(Note 3)Be careful that the outdoor fan may turn while the unit is stopped.

(Note 4)Set when the outdoor unit is installed in a location higher than the indoor unit, the difference in levels between the indoor units is 9 m or higher, and the ratio of the bottom indoor unit is 50% or less.

1.4.4 Alarm/Warning History

(1) Enter STOP mode, select CH [4] in Level 1 and press NEXT . (2) Select the CH of the desired alarm/warning **(Table 4.13)** in Level 2 and press NEXT . The code and operation time at occurrence are displayed alternately.

Table 4.13/ (Alarm/warning display list)

CH	Item	CH	Item
01	1st most recent warning	13	1st most recent alarm
02	2nd most recent warning	14	2nd most recent alarm
⋮	⋮	⋮	⋮
12	12th most recent warning	24	12th most recent alarm

1.5 Main Operations in Servicing

Caution
- If you are instructed to reset the outdoor unit's power supply, after turning off the power, make sure that none of the LEDs on the circuit board are lit before turning the power back on.
- After completing inspection or repair, be sure to perform sufficient actuator checks and test runs to ensure that operation is normal.

1.5.1 Test Run

■ **Configuring the memory switches**

You can change the preconfigured settings (factory defaults) by selecting "3. Configure items" in the STOP mode. For information on how to change the memory switches, see **page 114 [How to Use the Checker on PCB]** and **page 121 [STOP Mode]**.

- You can configure the quiet mode, energy saving mode, snow sensor, periodic inspection reminder and other settings.

■ **Clearing the error code (alarm)**

If trouble or a failure occurs during operation and the system stops with an error code (alarm) shown, follow the steps below to clear the alarm display.

There are four ways of clearing the alarm display. Clearing the alarm display not only clears the alarm shown on the outdoor unit but also resets the warning counter simultaneously.

[Clearing the alarm display from an indoor unit remote controller]

Stop one or more indoor units by turning the RUN switch from ON to OFF. (If the alarm display is latched (retained) to all the indoor unit remote controllers, however, only the alarm display for the indoor unit on which you turned OFF the RUN switch will be cleared.)

[Clearing the alarm display from the onboard checker]

1. Using the onboard checker (Checker on PCB), press and hold down (ENTER) for 3 seconds or longer when the unit is running or alternately showing the total operated hours and an alarm to clear the alarm.
2. With the onboard checker set to the STOP mode, select "1. Alarm display" and, when an alarm is shown, press and hold down (ENTER) for 3 seconds for longer. (However, if the alarm display is latched (retained) to all the indoor unit remote controllers, the remote control unit showing the alarm must be turned OFF.)

[Clearing the alarm display from a monitor communication device]

Send a "Clear Alarm" signal from a PC or other device to the outdoor unit according to the specifications of the monitor communication device. (However, if the alarm display is latched (retained) to all the indoor unit remote controllers, the remote control unit showing the alarm must be turned OFF.)

[NOTE] Clearing the alarm display from an indoor unit remote controller may not be possible depending on the error code (alarm). In this case, clear by turning the power off and then back on.

■ **Rewiring the communication cables between the outdoor and indoor units**

If you have changed the number of connected outdoor or indoor units, or performed any operation related to the communications between outdoor and indoor units (such as circuit board replacement), with all the units and devices for which you want to establish communications powered on, perform rewiring on one of the outdoor units.

[Rewiring method]

Press and hold down SW2 (Rewire Checker button) located on the main circuit board for 5 seconds or longer.

Make sure that the dot next to the left digit of the 7-segment hour meter display starts double flashing.

■ **Pump down operation procedure**

1. On the outdoor unit, close the liquid side stop valve.
2. With the onboard checker set to the RUN mode, select "2. Special operation" to start the pump down operation. For information on how to perform the special operation, see **page 114 [How to Use the Checker on PCB]** and **page 115 [RUN Mode]**.
3. Keep the unit running as is. The unit stops automatically when the low-side pressure remains at 0.12 MPa or lower for 10 seconds or falls to 0.05 MPa or lower.
4. Immediately close the outdoor unit's gas side stop valve (intake gas side stop valve and discharge gas side stop valve).
5. Turn off the power to the outdoor unit.

∗ Depending on the recharge amount, the outdoor unit may not be able to pump down the whole amount of the refrigerant.

1.5.2 Periodic Inspection

Enable or disable the periodic inspection reminder. In addition, at the end of periodic inspection or maintenance, be sure to clear the elapsed time since the last maintenance.

■ **Display of periodic inspection reminder [L8]**

The periodic inspection reminder function is enabled by default to prompt for the arrival of the periodic inspection timing and force-stop the system in the following sequence. (Standard setting)

1. When the elapsed time since the last maintenance exceeds 9,800 hours, the system shows a reminder without stopping.
2. When the elapsed time since the last maintenance exceeds 10,000 hours, the system enters the energy saving mode.
3. When the elapsed time since the last maintenance exceeds 10,300 hours, the system continues operating in the energy saving mode.

[Energy saving mode]

In this mode, the engine speed is decreased to save the cooling/heating capacity to protect the system.

[Clearing the elapsed time since the last maintenance]

Perform while the STOP mode is set to "3. Configure items." For information on how to clear the elapsed time since the last maintenance, see **page 114 [How to Use the Checker on PCB]** and **page 121 [STOP Mode]**.

1.5.3 Part Replacement

■ **Operation performed when refilling the cooling water or extracting the air**

[To cool down the cooling water after stopping the system]

The cooling water is hot immediately after stopping the system. Use the following method to cool it down.

- With the onboard checker set to the STOP mode, select "2. Actuator check" and select the cool-down mode. Then, the cooling water pump and the outdoor fan start operating and the radiator cools down the cooling water. However, the cool-down performance will drop if the temperature reaches 70°C or lower because the cooling water does not circulate in the radiator. For information on how to perform the special operation, see **page 113 [How to Use the Checker on PCB]** and **page 114 [RUN Mode]**.

■ **Clearing the GVM correction amount after replacing specific parts**

[After replacing the air cleaner element]

If you have replaced the air cleaner element without clearing the elapsed time since the last maintenance, **clear the GVM aging correction amount**.

[After replacing the mixer, regulator, or engine]

If you have replaced the mixer, regulator, or engine, **clear the initial GVM correction amount**.

- These clearing operations must be performed after replacing the part. For information on the operating methods, see **page 114 [How to Use the Checker on PCB]** and **page 121 [STOP Mode]**.

NOTE: Be sure to clear the correction amount after replacing these parts. Failing to do so may cause the engine to stall.

■ Replacing the main circuit board

Replacing the main circuit board requires the update of the main CPU software and the reinstallation of the EEPROM on the new main circuit board.

Fig. 4.8/Location of the software update switch and the EEPROM on the main circuit board

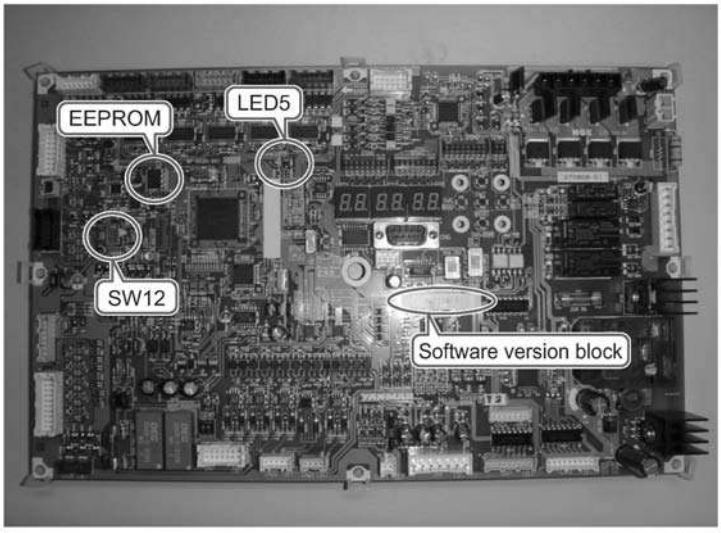

023457-01EN00

1. Before following the replacement procedure, write down the total operating time shown on the 7-segment hour meter.
2. Turn OFF the outdoor unit's main power supply breaker. Make sure that none of the LEDs on the circuit board are lit. It is dangerous if there are residual electrical charges.
3. Remove the main circuit board and then remove the EEPROM from the main circuit board.
4. Reinstall the removed EEPROM onto a new main circuit board.
5. Install the new main circuit board into the outdoor unit.
6. Write the main CPU software onto the new main circuit board.
   (The main CPU software is not prewritten onto the spare circuit board.)
   (1) Connect a PC to the main circuit board. (In the same way as for the PC checker.)
   (2) Write the main CPU software.
   - Set SW12 on the main circuit board to the "Main CPU writing" side.
   - Turn ON the outdoor unit's main power supply breaker and make sure that "P on" is shown on the 7-segment display.
   - Using the writing application installed on the PC, write the main CPU software.
   - When finished writing the main CPU software, exit the writing application and turn OFF the outdoor unit's main power supply breaker.
   - Turn SW12 on the main circuit board back to the "Normal" side.

   (3) Make sure that the main CPU software is written and runs successfully. Check also that the version of the written software is correct.
   - Turn ON the outdoor unit's main power supply breaker and make sure that "P on" is shown temporarily on the 7-segment display.
   - Check that LED5 on the main circuit board is flashing.
   - Make sure that the total operating time on the 7-segment display shows the time you wrote down at the beginning of this replacement procedure.
   - Using the onboard checker, press (UP) and check the version of the main CPU software.
   - Make sure that no parts on the circuit board are damaged and that all the connectors are correctly inserted.
7. Write the version of the written software into the software version entry area of the new main circuit board.
8. Perform sufficient actuator checks and test runs to ensure that operation is normal.

2. Flow Charts for Troubleshooting

2.1 Problems without Error Codes

1 Unit Fails To Start

Flow chart

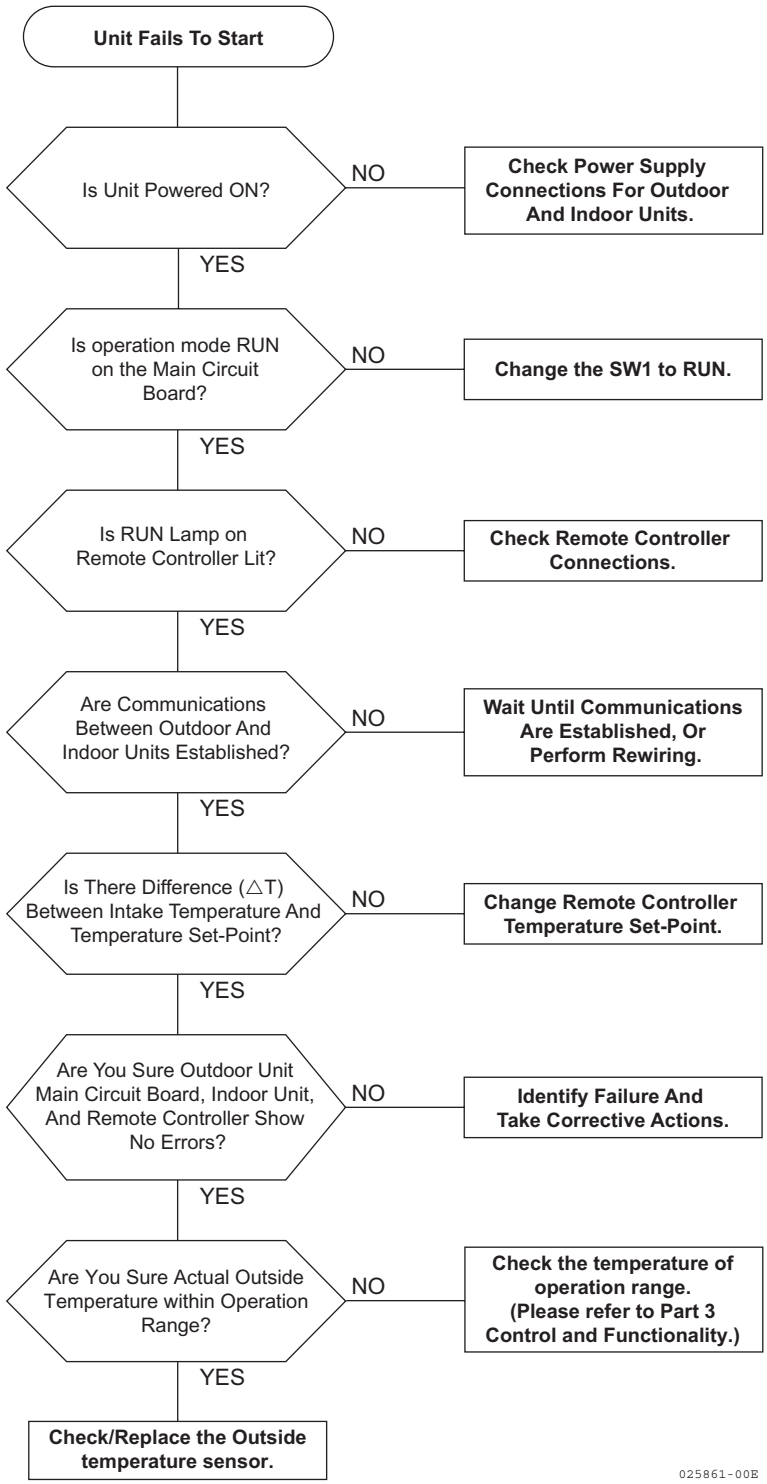

2 Unit Runs But Does Not Cool

Flow chart

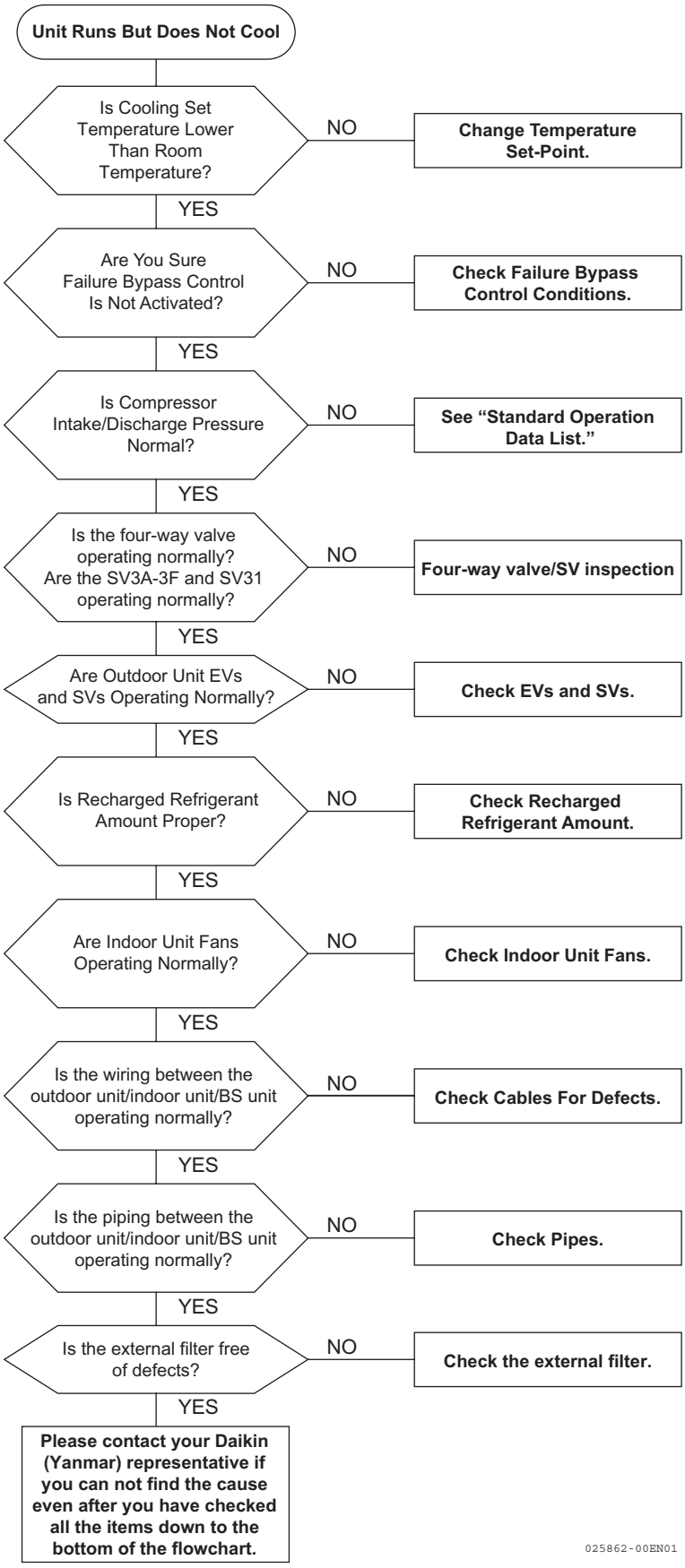

3 Unit Runs But Does Not Heat

Flow chart

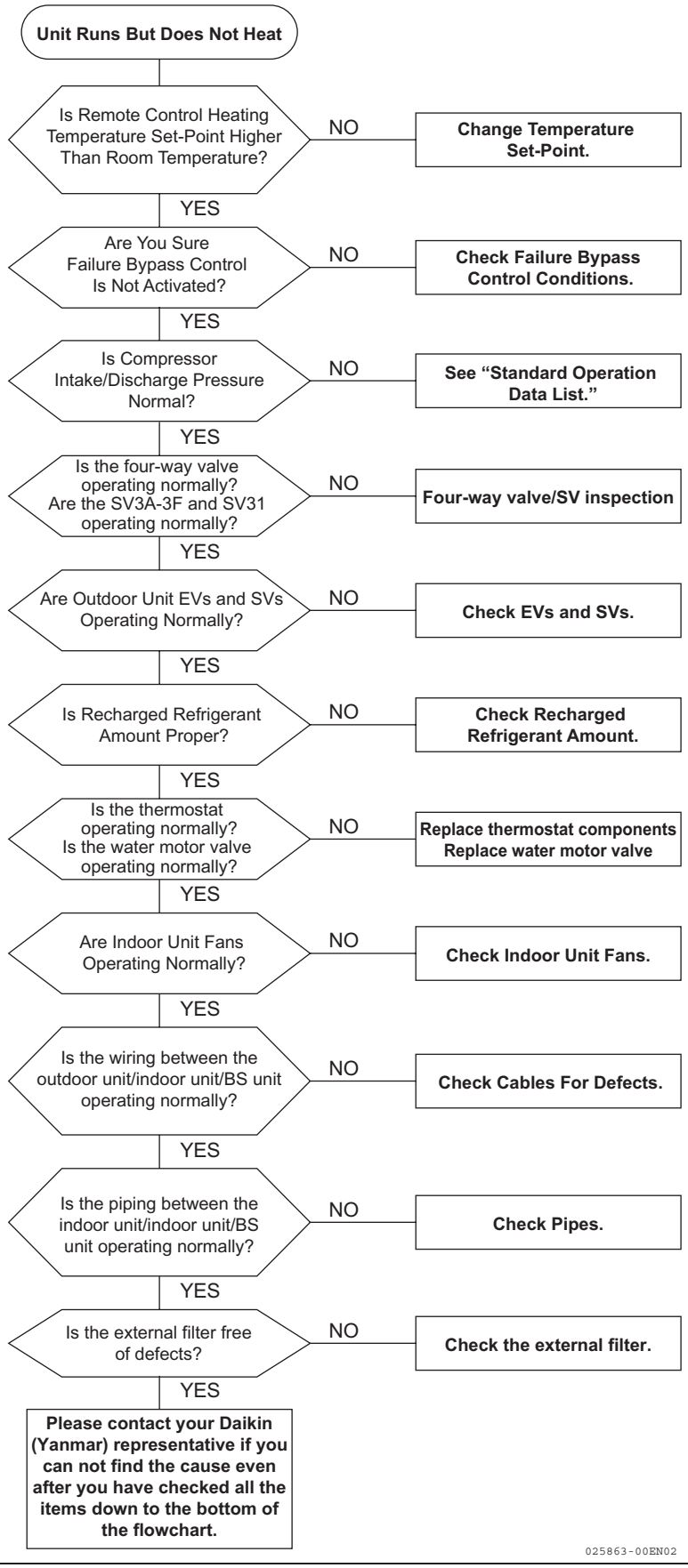

2.2 Problems with Error Codes

1	Engine Fails To Start Up	Error code	E0
Description of the failure	Sub-code 0: The engine speed does not exceed 800 min^{-1} during the startup sequence.		
Possible causes of the failure	Fuel supply failure; starter system failure; ignition system failure; intake/exhaust system failure; incorrect compression; incorrect valve clearance; main circuit board failure; cam crank pulse sensor failure; insufficient equalization of refrigerant; compressor failure; oil level high		

Flow chart

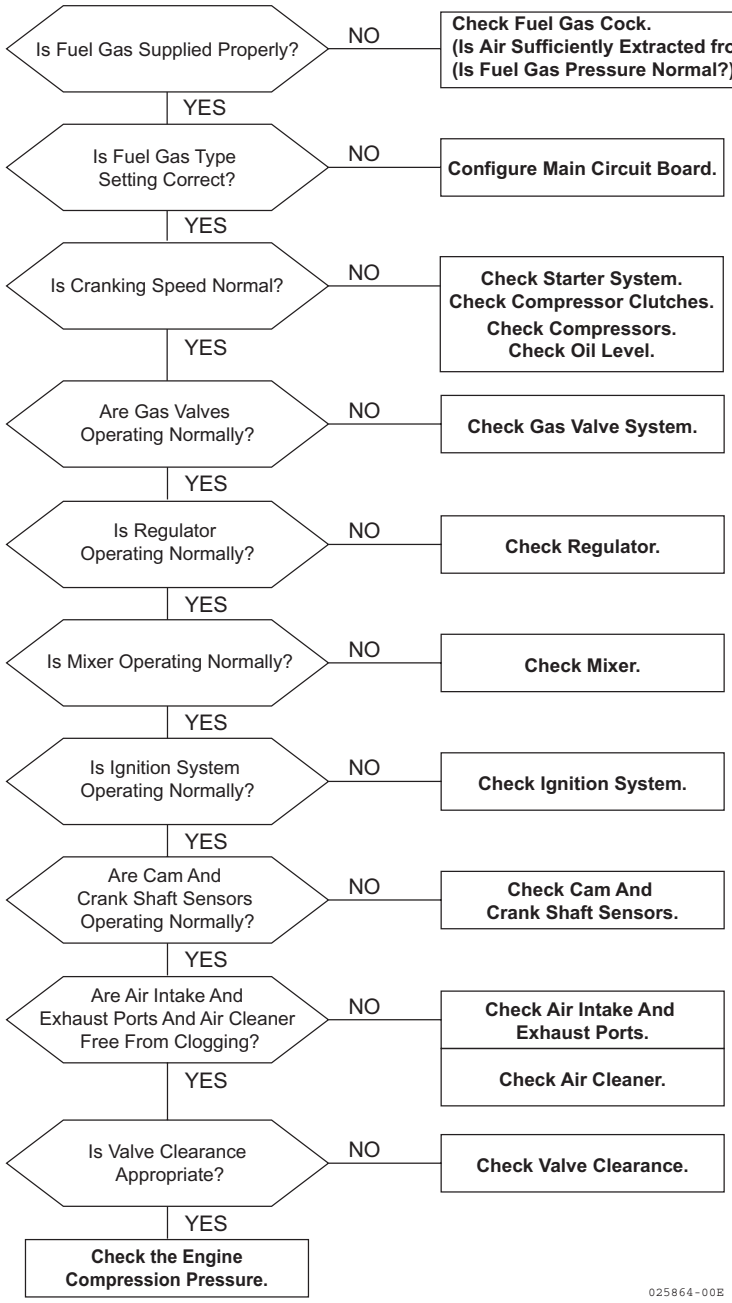

2	Engine Overspeed	Error code	E1
Description of the failure	Sub-code 0: While the unit is running, the engine speed exceeds the maximum speed specific to the model plus the regulated speed specific to the model.		
Possible causes of the failure	Rib belt broken; mixer malfunctioning; clutch malfunctioning; crank pulse sensor gap incorrect; blow-by system failure; gas pressure abnormally fluctuating; ignition system instable		

Flow chart

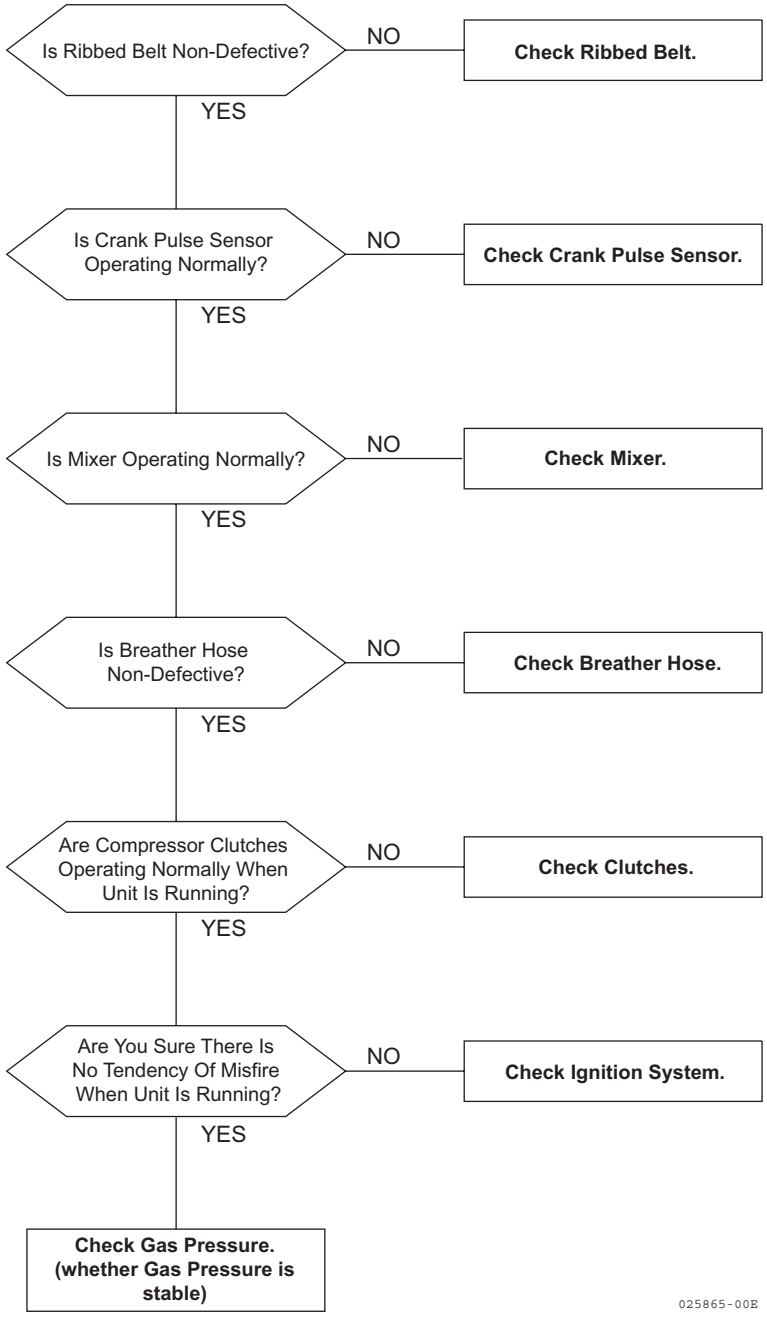

3	Engine Stall	Error code	E2
Description of the failure	Sub-code 0: While the unit is running, the engine speed falls to 400 min^{-1} or lower.		
Possible causes of the failure	Fuel supply failure; ignition system failure; intake/exhaust system failure; incorrect compression; incorrect valve clearance; compressor failure; oil level high; refrigerant system failure		

Flow chart

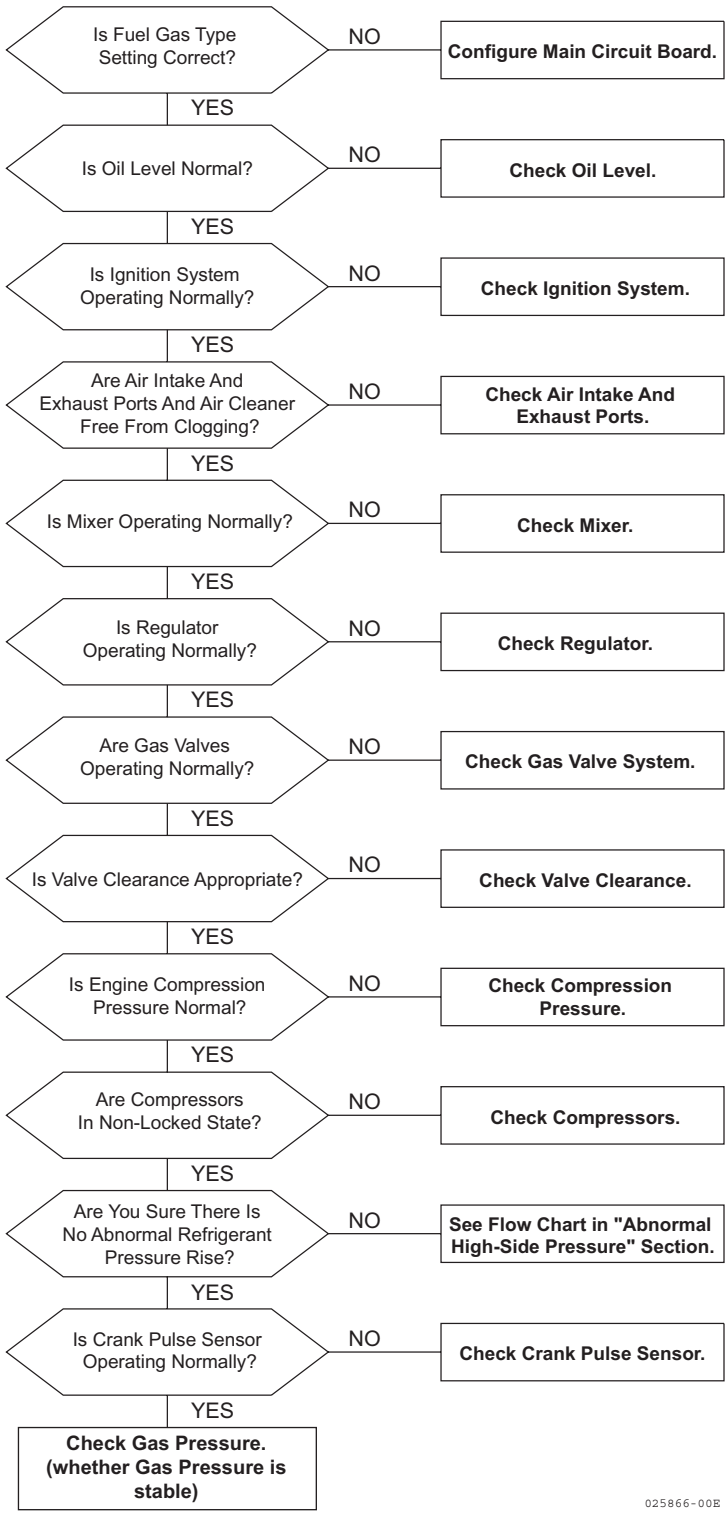

4	Oil Pressure Too Low	Error code	E3
Description of the failure	Sub-code 0: The oil pressure switch is ON in 15 seconds after engine startup.		
Possible causes of the failure	Oil pressure switch contact failure; pressure regulator valve failure; oil filter clogged; oil level too low; engine oil abnormally consumed; oil leak		
Flow chart			

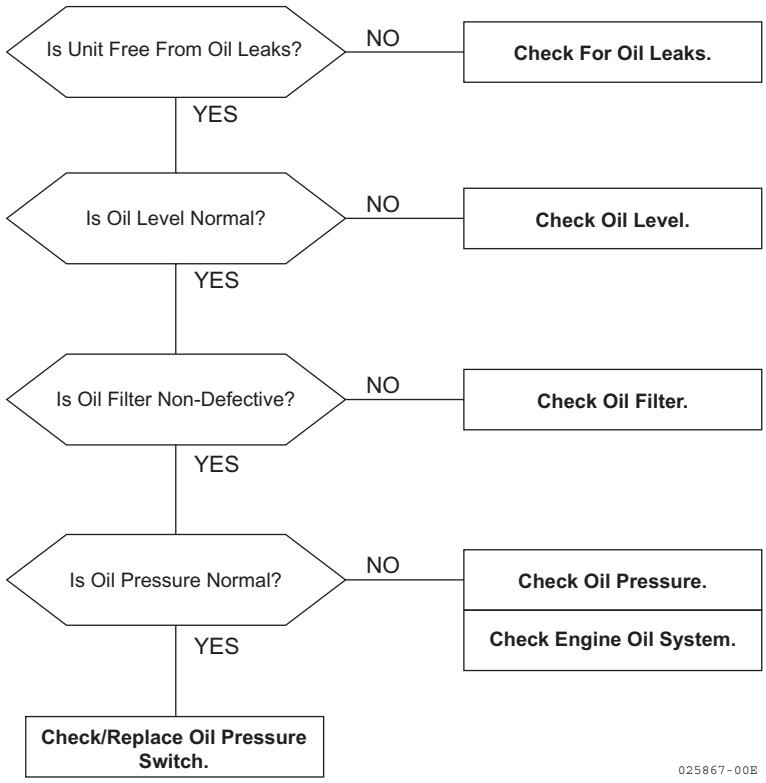

5	Abnormal Cooling Water Temperature	Error code	E4
Description of the failure	Sub-code 0: While the unit is running, the cooling water temperature rises beyond 105°C. Sub-code 1: The cooling water temperature fails to reach 40°C within 20 minutes after the engine has started up.		
Possible causes of the failure	Cooling water pump failure; fan motor failure; water motor-operated valve failure; cooling water level too low; cooling water filter clogged; radiator clogged; radiator cap faulty; thermostat failure; air extractor failure; short circuit; cooling water temperature sensor failure; main circuit board failure; cooling water leak		

Flow chart

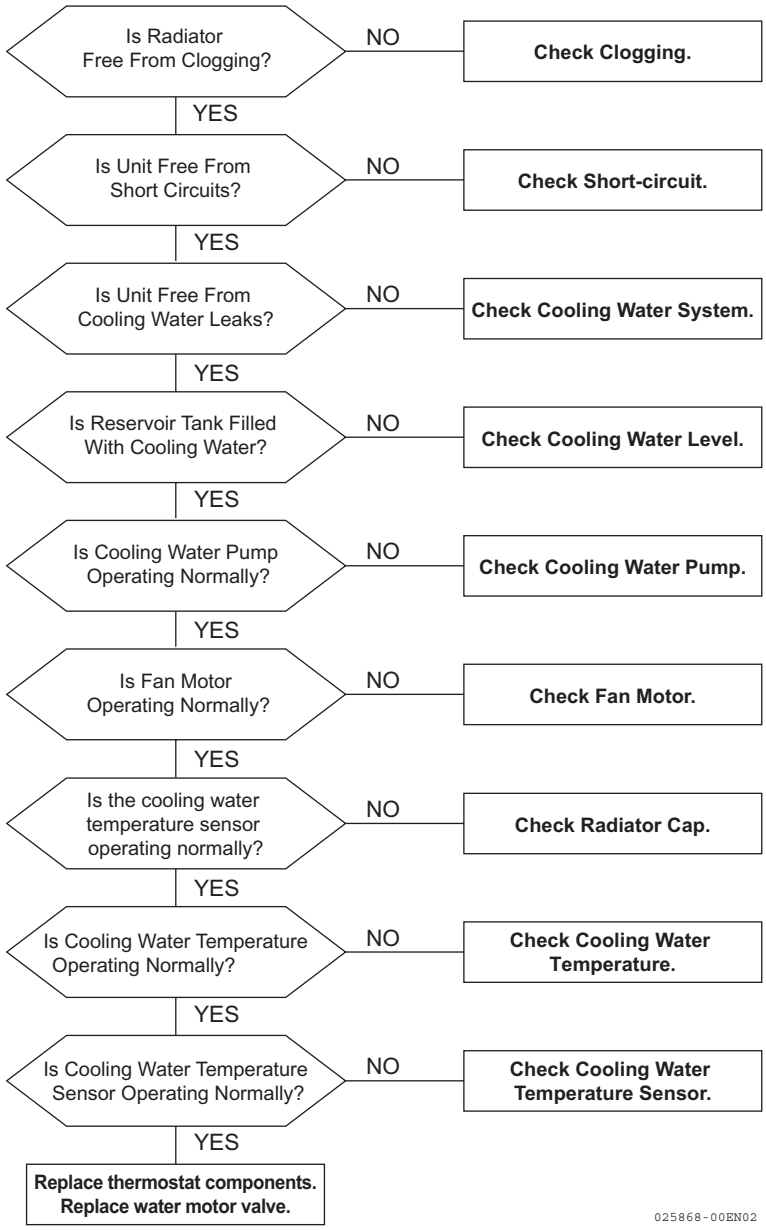

6	Abnormal Discharge Temperature	Error code	E6
Description of the failure	Sub-code 0: While the unit is running, discharge temperature 1 rises beyond 120°C. Sub-code 1: While the unit is running, discharge temperature 2 rises beyond 120°C. Sub-code 2: While the unit is running, discharge temperature 1 remains equal to or higher than the discharge predicted temperature for 10 minutes. Sub-code 3: While the unit is running, discharge temperature 2 remains equal to or higher than the discharge predicted temperature for 10 minutes. Sub-code 4: While the unit is running, discharge temperatures 1 and 2 both remain equal to or higher than the discharge predicted temperature for 10 minutes.		
Possible causes of the failure	Sensor failure; refrigerant level too low; EV failure; four-way valve failure; SV failure; refrigerant piping clogged; intake air temperature sensor failure; compressor failure; BS unit failure; outdoor heat exchanger clogged; indoor heat exchanger clogged; short circuit; external filter clogged		

Flow chart

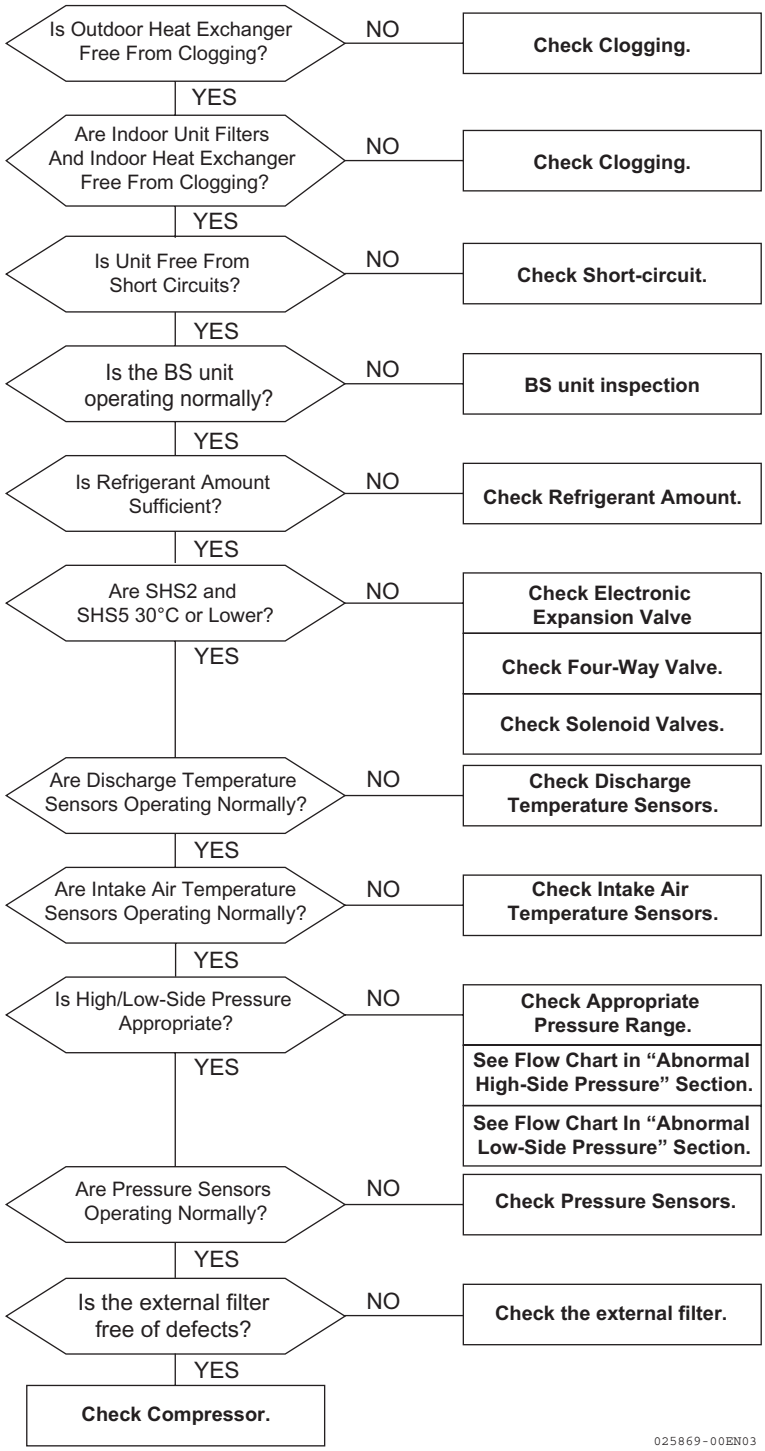

7	Abnormal High-Side Pressure	Error code	E7
Description of the failure	Sub-code 0: While the unit is running, high-side pressure 1 rises to 3.85 MPa or higher. Sub-code 1: While the unit is running, high pressure SW1 or high pressure SW2 turns OFF, clutch 1 turns ON, and clutch 2 turns ON. Sub-code 2: While the unit is running, high-side pressure 4 rises to 3.25 MPa or higher. Sub-code 4: While the unit is running, high pressure SW1 or high pressure SW2 turns OFF, clutch 1 turns ON, and clutch 2 turns OFF. Sub-code 5: While the unit is running, high pressure SW1 or high pressure SW2 turns OFF, clutch 1 turns OFF, and clutch 2 turns ON.		
Possible causes of the failure	Sensor failure; refrigerant overcharged; EV failure; four-way valve failure; SV failure; refrigerant piping clogged; compressor failure; fan failure; outdoor heat exchanger clogged; indoor heat exchanger clogged; short circuit; stop valve failure; external filter clogged		

Flow chart

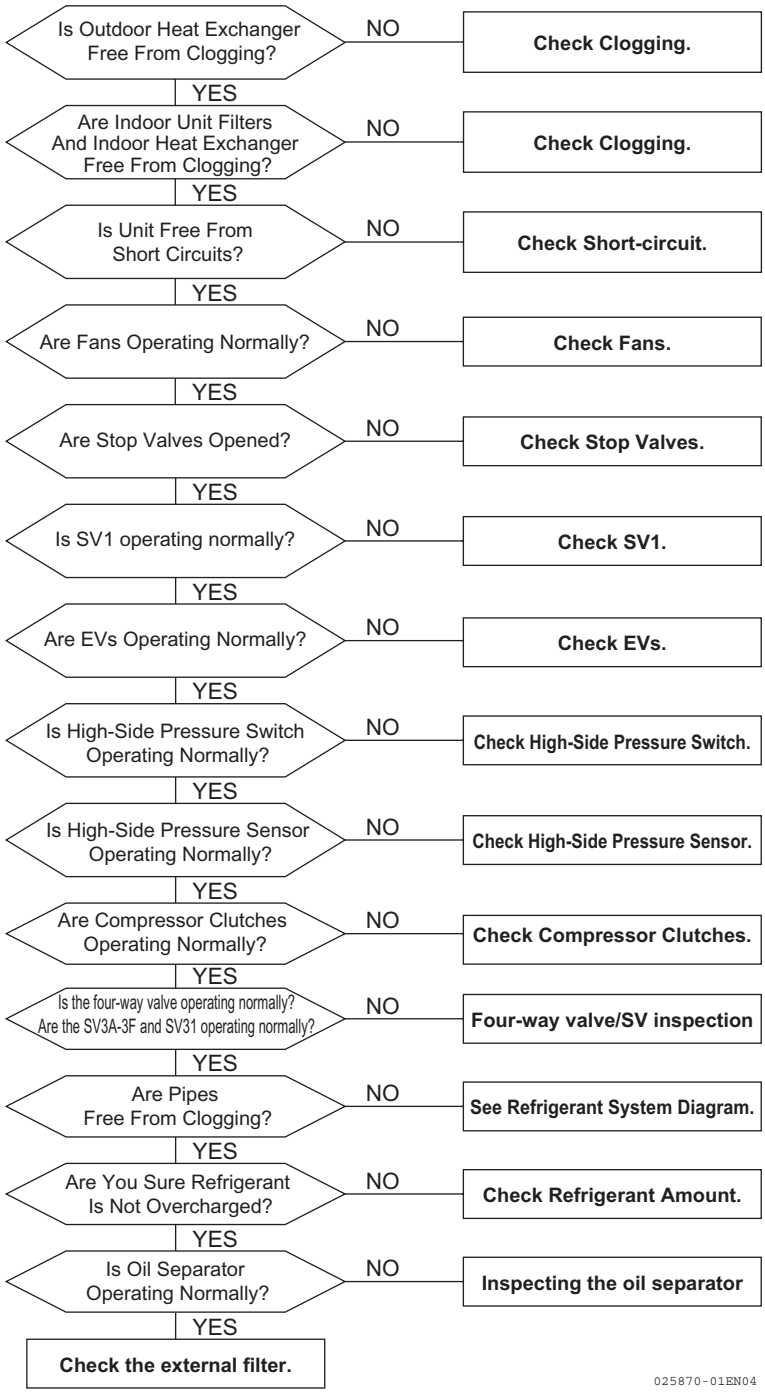

8	Abnormal Low-Side Pressure	Error code	E9
Description of the failure	Sub-code 0: While the unit is running, the low-side pressure drops to 0.05 MPa or lower. Or the low-side pressure remains equal to or lower than 0.12 MPa for 20 seconds.		
Possible causes of the failure	Sensor failure; refrigerant level too low; EV failure; SV failure; piping clogged; outdoor heat exchanger clogged; indoor heat exchanger clogged; fan failure; thermostat failure; stop valve failure; cooling water pump failure; cooling water pump concentration too low; external filter clogged		
Flow chart			

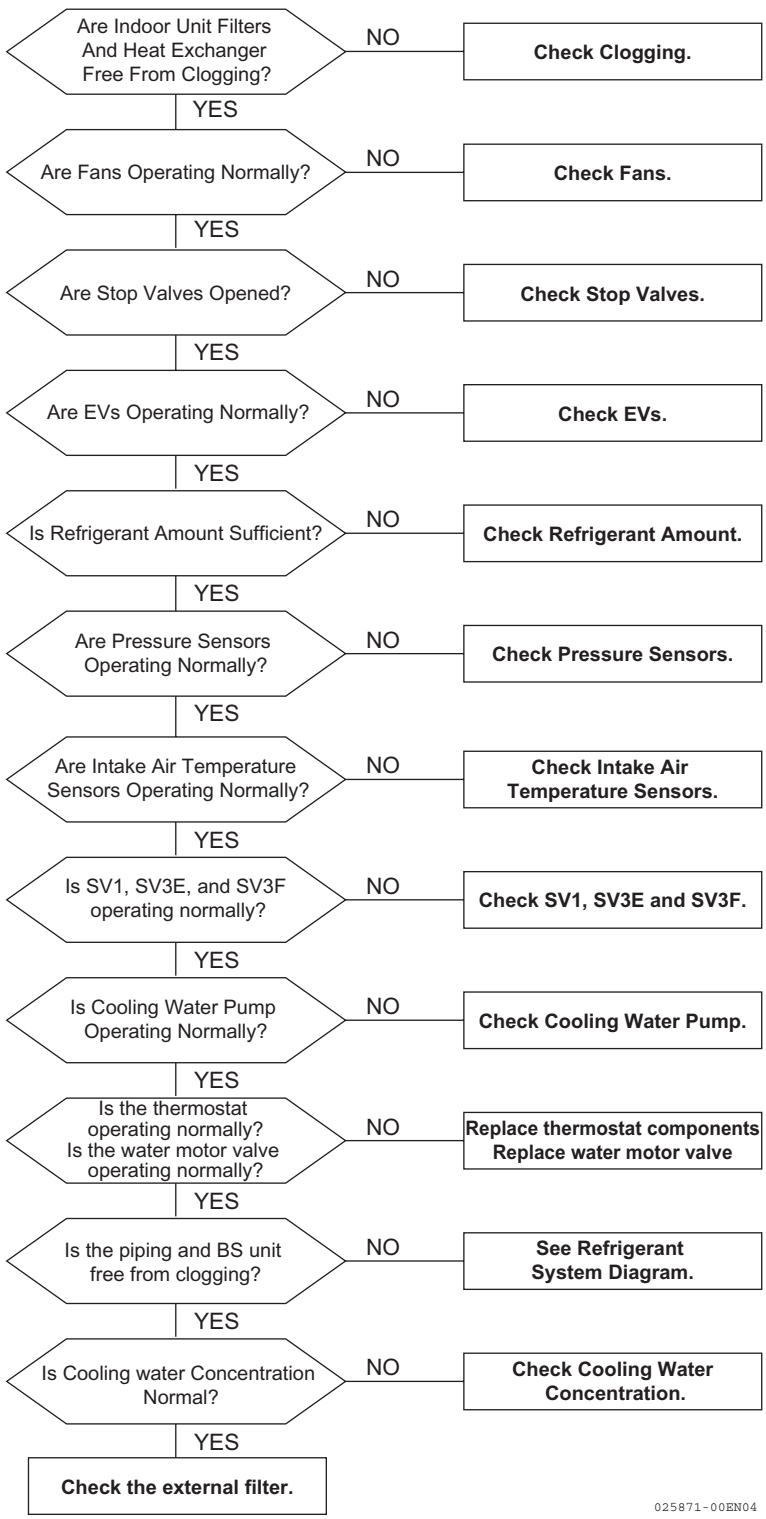

9	Abnormal EEPROM	Error code	EA
Description of the failure	Sub-code 0: EEPROM's internal data area is unreadable.		
Possible causes of the failure	EEPROM failure; main circuit board failure		

Flow chart

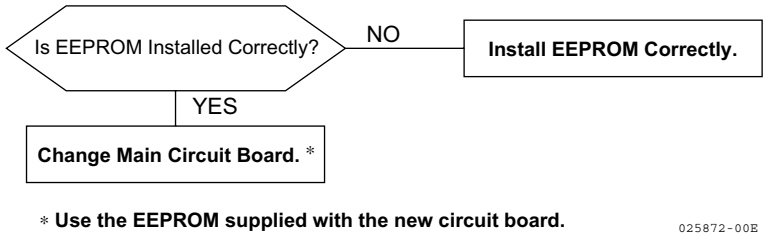

10	Software Version Mismatch	Error code	EH
Description of the failure	Sub-code 0: Incorrectly updated to a software version for a different model. Sub-code 2: Incorrectly updated to a software version for a different series. Sub-code 2: PCB is not supported by the software.		
Possible causes of the failure	Software version for a different model; software version for a different series; EEPROM failure; PCB mismatch		

Flow chart

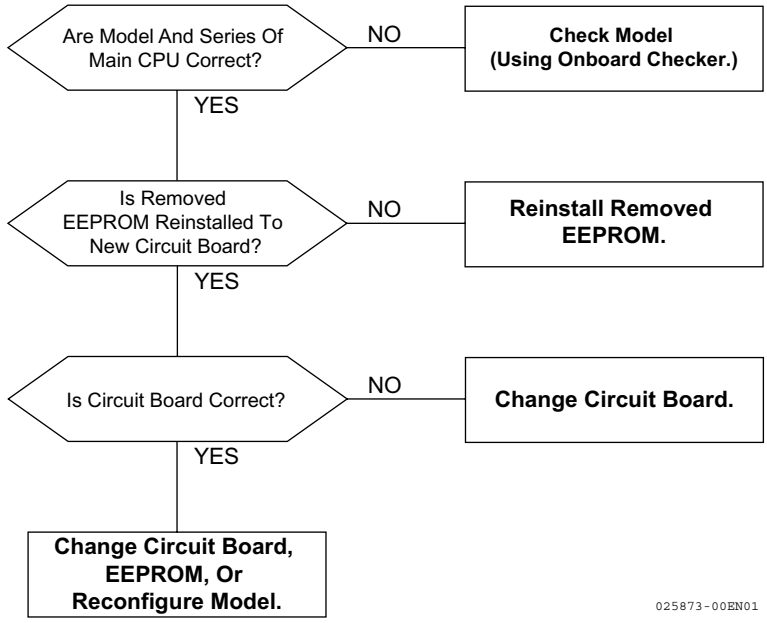

11	Starter System Failure	Error code	F0
Description of the failure	Sub-code 0: The engine speed signal is not output within 3 seconds after the starter has been turned ON.		
Possible causes of the failure	Starter system failure; main circuit board failure; cam crank pulse sensor failure; oil level high; insufficient equalization of refrigerant; compressor failure		
Flow chart			

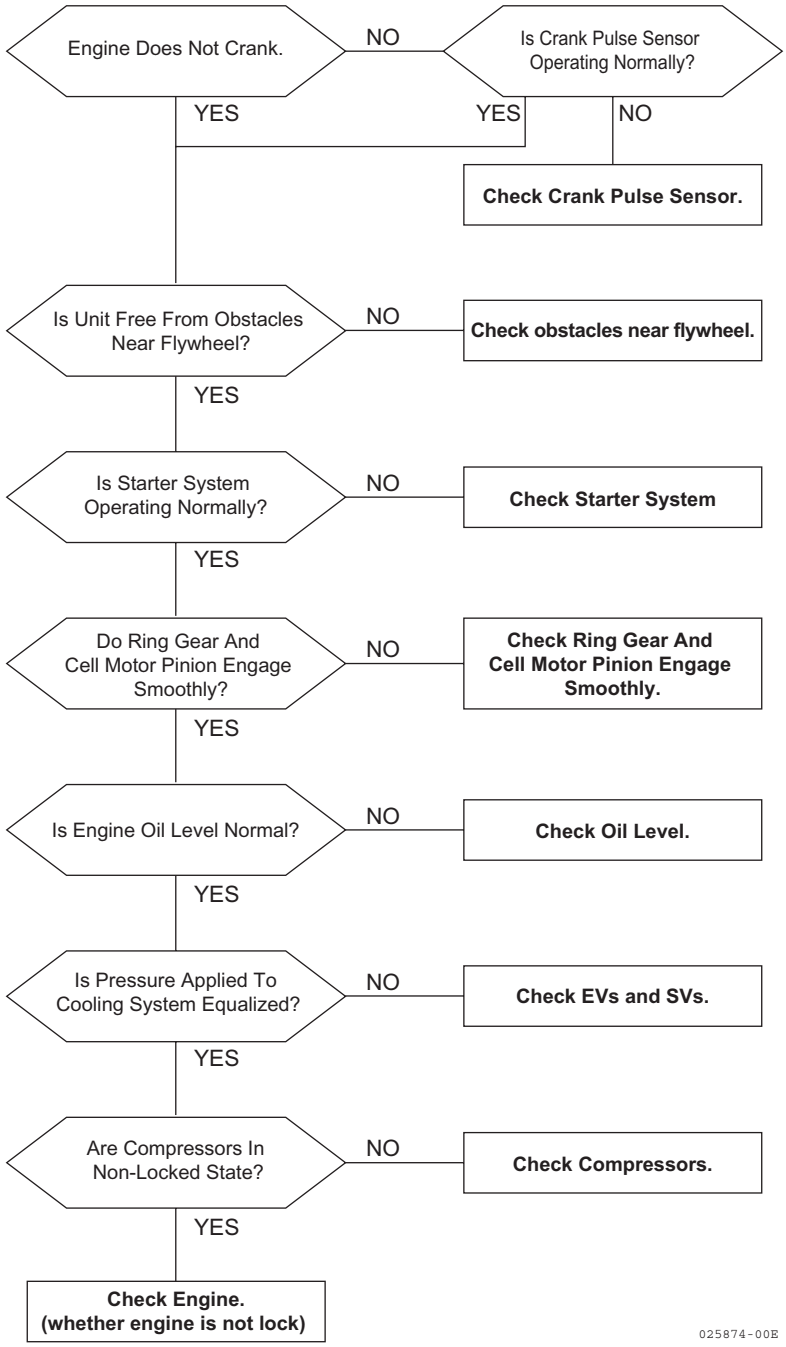

12	Outdoor Fan Failure	Error code	F2
Description of the failure	Sub-code 0: All fans fail to run within 60 seconds after they receive a Run command.		
Possible causes of the failure	Fan failure; harness failure; DCBL circuit board failure; main circuit board failure		

Flow chart

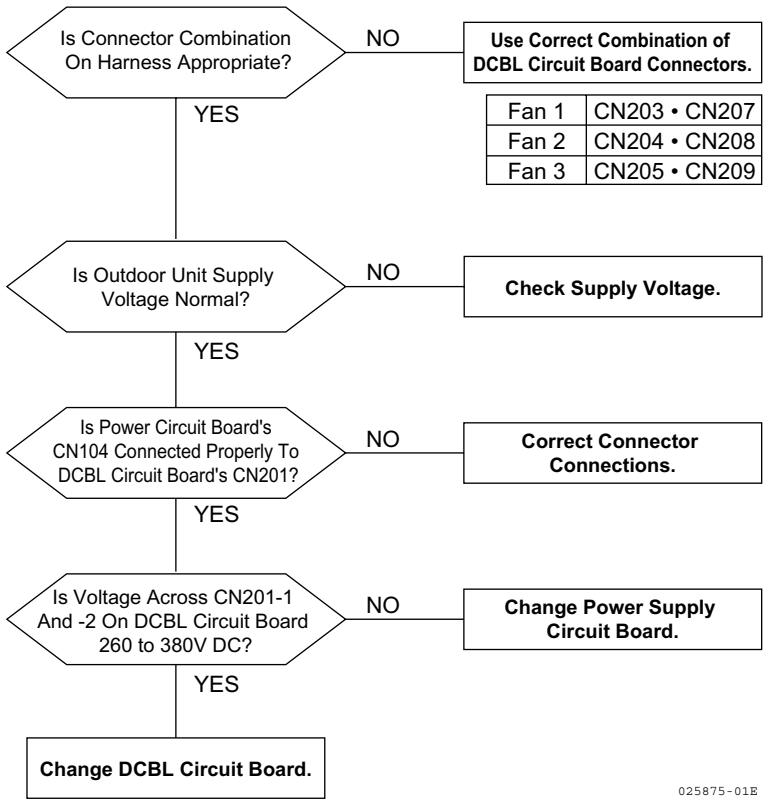

13	Oil Pressure Switch System Failure	Error code	F3
Description of the failure	Sub-code 0: The oil pressure switch fails to turn from ON to OFF within 15 seconds after engine startup.		
Possible causes of the failure	Oil pressure switch failure; harness failure; main circuit board failure; engine lubricating oil pump failure		

Flow chart

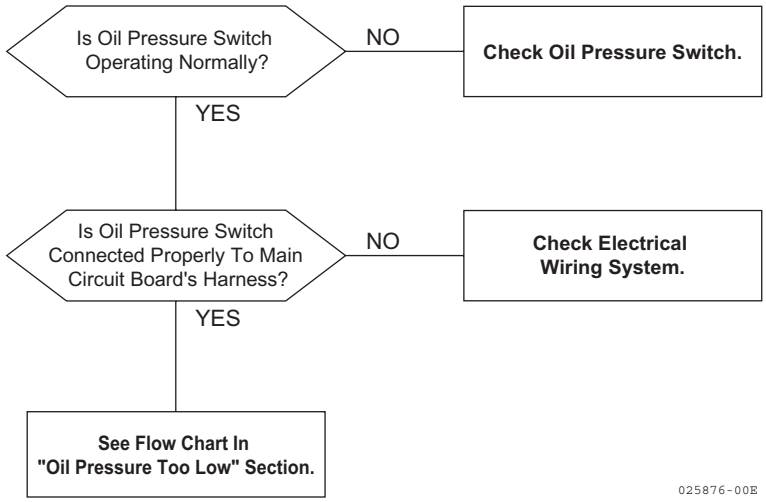

14	Cooling Water Temperature Sensor Disconnected/Shorted	Error code	F4
Description of the failure	Sub-code 0: While the unit is running, the cooling water temperature is reported as 200°C (which means that the cooling water temperature sensor is disconnected). Sub-code 1: While the unit is running, the cooling water temperature is reported as 201°C (which means that the cooling water temperature sensor is shorted).		
Possible causes of the failure	Cooling water temperature sensor failure; harness failure; main circuit board failure		

Flow chart

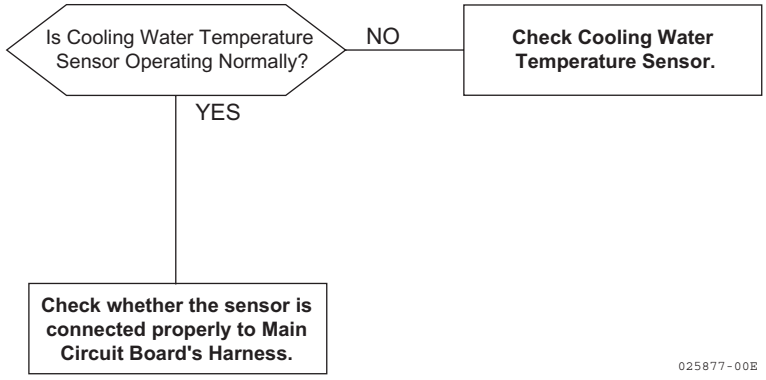

15	Discharge Temperature Sensor Disconnected/ Shorted	Error code	F6
Description of the failure	Sub-code 0: While the unit is running, the outdoor air temperature is 10°C or higher but discharge temperature 1 fails to rise above 0°C (which means that discharge temperature sensor 1 is disconnected). Sub-code 1: Discharge temperature 1 fails to rise above 0°C within 20 minutes after startup (which means that discharge temperature sensor 1 is disconnected). Sub-code 2: While the unit is running, discharge temperature 1 is reported as 201°C (which means that discharge temperature sensor 1 is shorted). Sub-code 3: While the unit is running, the outdoor air temperature is 10°C or higher but discharge temperature 2 fails to rise above 0°C (which means that discharge temperature sensor 2 is disconnected). Sub-code 4: Discharge temperature 2 fails to rise above 0°C within 20 minutes after startup (which means that discharge temperature sensor 2 is disconnected). Sub-code 5: While the unit is running, discharge temperature 2 is reported as 201°C (which means that discharge temperature sensor 2 is shorted).		
Possible causes of the failure	Discharge temperature sensor failure; harness failure; main circuit board failure		

Flow chart

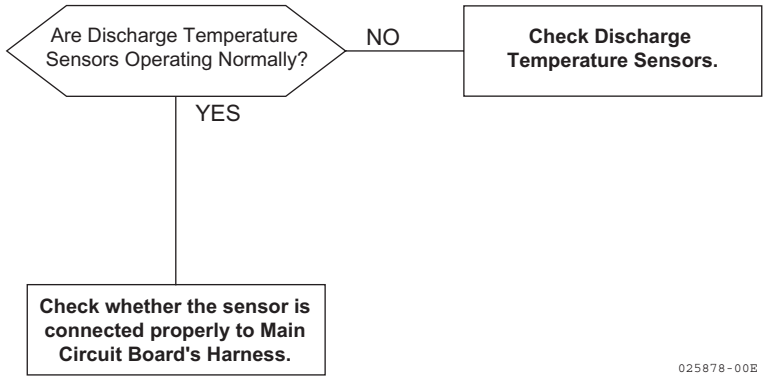

16	Abnormal Engine Room Temperature	Error code	F7
Description of the failure	Sub-code 0: At least two of the following conditions are true: 1) Any of intake air temperature sensors 1, 2, 3, 4 and 5 reports a temperature higher than 100°C and 2) any of oil temperature sensors 1 and 2 reports a temperature higher than 130°C.		
Possible causes of the failure	Engine room overheated/burned; intake air temperature sensor failure; oil temperature sensor failure; main circuit board failure		

Flow chart

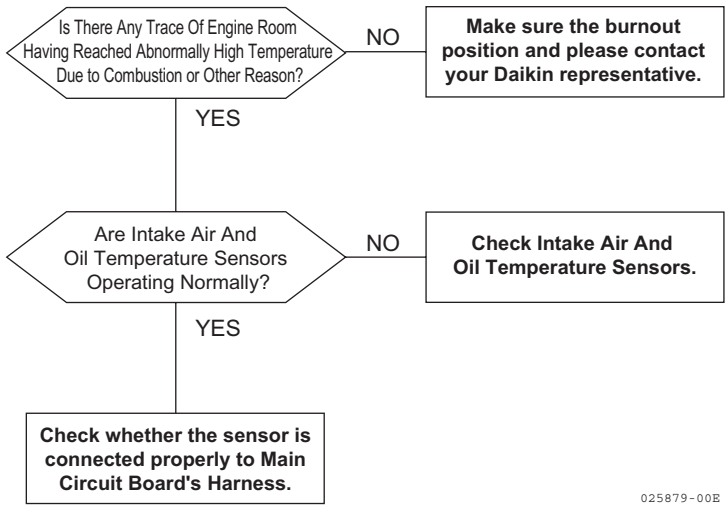

17	Short of Refrigerant	Error code	F9
Description of the failure	Sub-code 0: The low-side refrigerant pressure is detected equal to or lower than 0.05 MPa just before startup.		
Possible causes of the failure	Low-side pressure sensor failure; refrigerant leak		

Flow chart

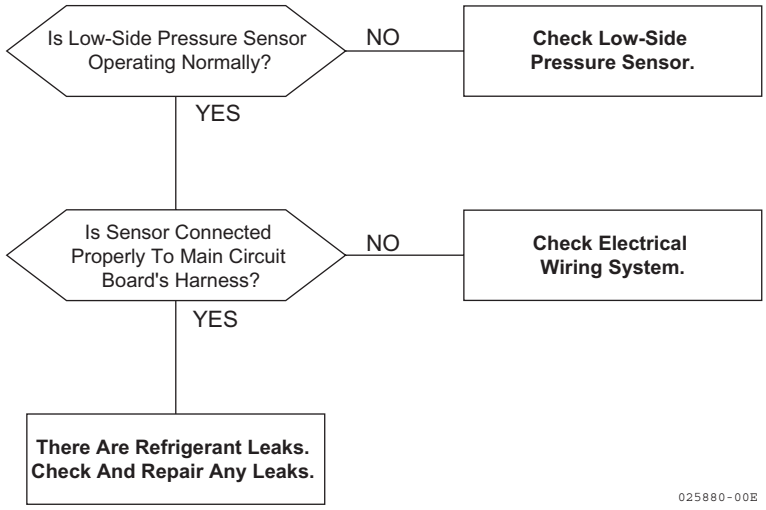

18	Compressor Oil Detected Too Low	Error code	FH
Description of the failure	Sub-code 0: An empty oil separator has been detected. Sub-code 2: While oil separator heating control is being performed, SH01 or SH02 whichever is lower stays equal to or lower than 5°C for 40 minutes. Sub-code 3: SH01 or SH02 whichever is lower stays equal to or lower than 10°C for 5 minutes, or stays equal to or lower than 5°C for 2 minutes, or stays equal to or lower than 2°C for 10 seconds after 10 minutes or longer have elapsed after startup.		
Possible causes of the failure	Compressor oil leak; compressor failure; oil return pipe clogged; high-side pressure sensor failure; low-side pressure sensor failure; intake air temperature sensor failure; discharge temperature sensor failure; oil temperature sensor failure; SV failure; main circuit board failure; outdoor/indoor unit EV failure; check valve failure; four-way valve failure; refrigerant overcharged; indoor unit fan failure; heater failure; indoor unit filter/heat exchanger fouled; power supply failure; refrigerant recharging incorrect; energization time too short; power-ON start/power-OFF stop; BS unit failure		
Flow chart			

When Sub-code is 0

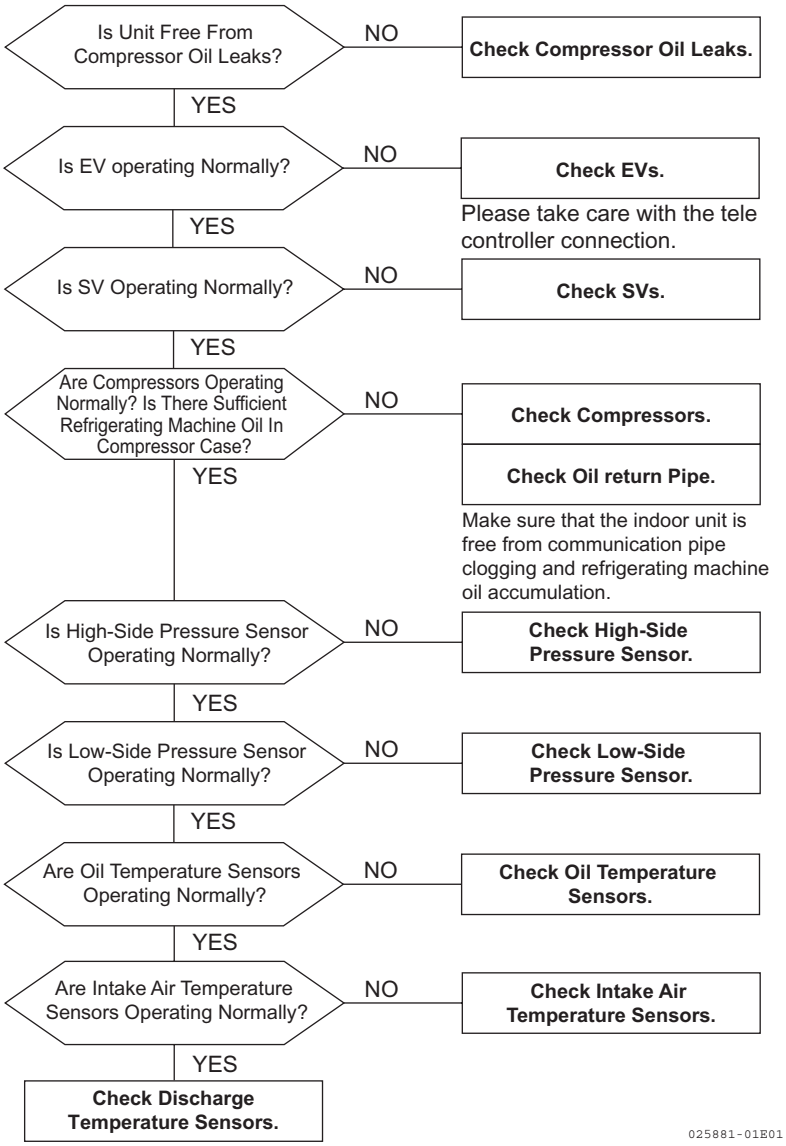

Flow chart

When Sub-code is 2・3

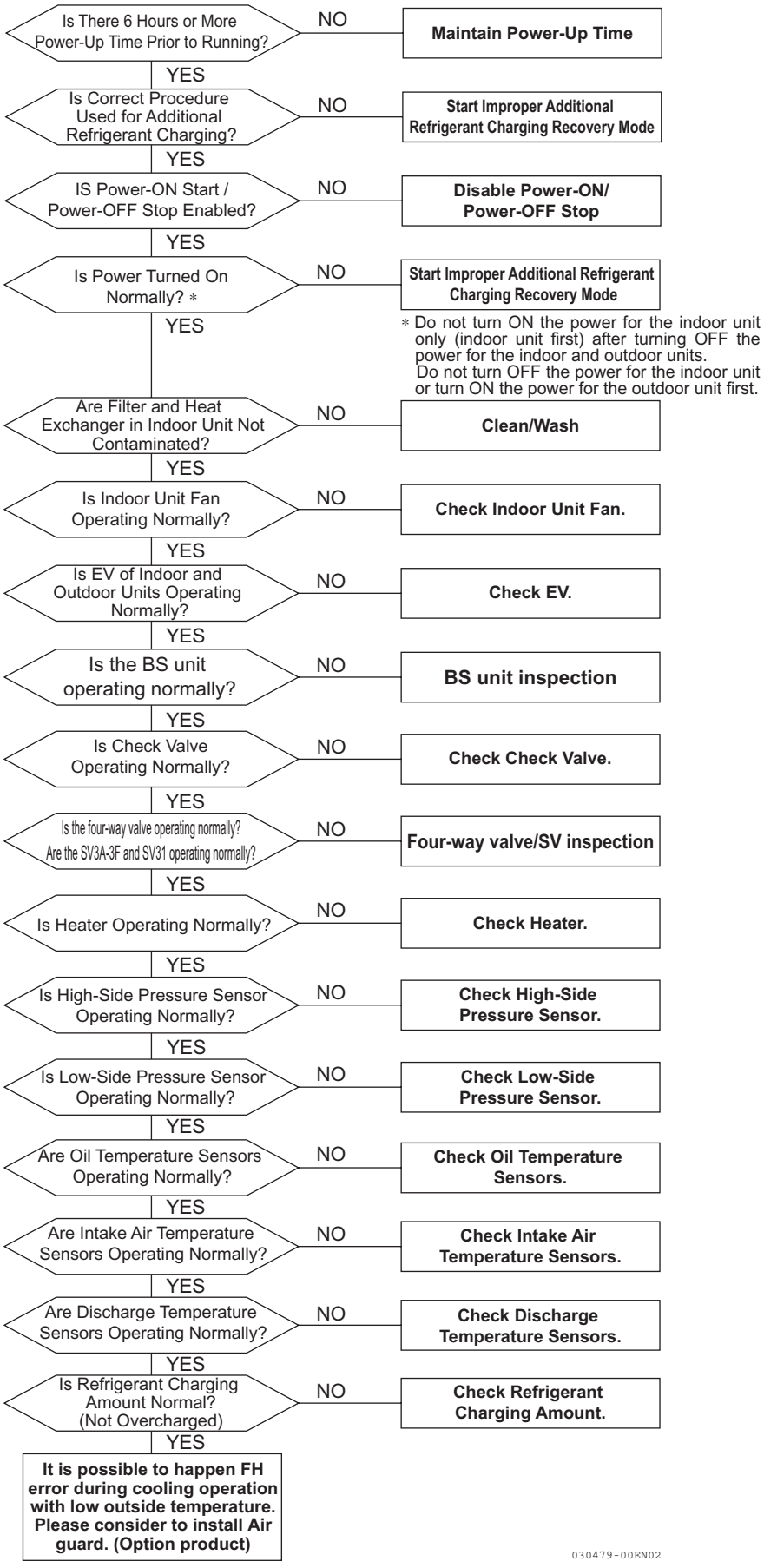

19	Abnormal High-Side Differential Pressure	Error code	FJ
Description of the failure	Sub-code 0: While the unit is running, the currently reported high-side pressure is equal to or higher than 3.1 MPa and the previously reported high-side pressure is equal to or lower than 2.9 MPa. Sub-code 1: While the unit is running, the currently reported high-side pressure is equal to or higher than 2.6 MPa and the previously reported high-side pressure is equal to or lower than 1.8 MPa.		
Possible causes of the failure	Oil separator clogged; high-side pressure sensor failure, main circuit board failure; stop valve left closed; external filter clogged		

Flow chart

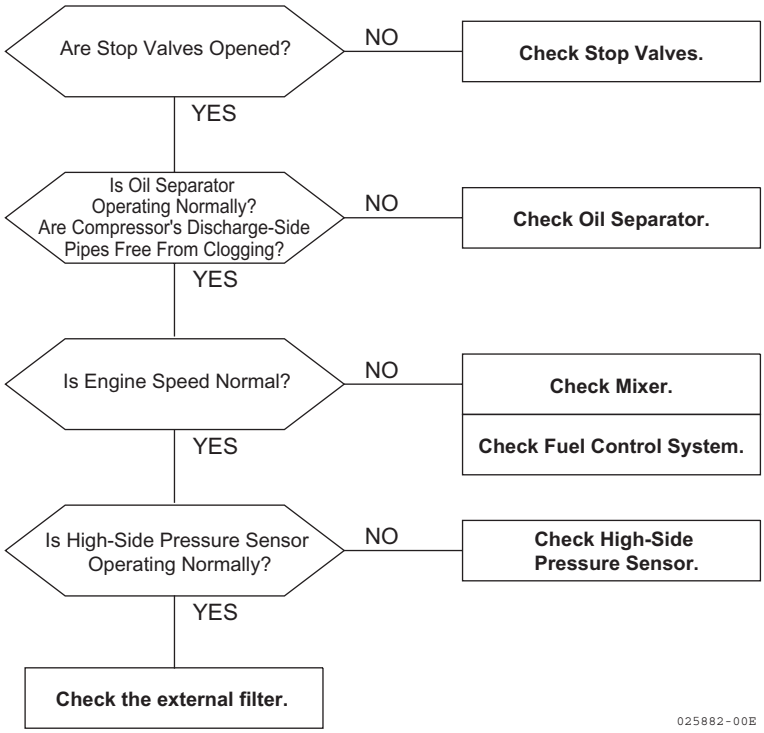

20	Misfire Detected	Error code	H0
Description of the failure	Sub-code 0: During 60 cycles, 48 or more misfires are reported 30 times consecutively. Sub-code 1: The voltage equivalent to the primary coil current of cylinder #1 remains 0 for 1 second. Sub-code 2: The voltage equivalent to the primary coil current of cylinder #2 remains 0 for 1 second. Sub-code 3: The voltage equivalent to the primary coil current of cylinder #3 remains 0 for 1 second. Sub-code 4: The voltage equivalent to the primary coil current of cylinder #4 remains 0 for 1 second.		
Possible causes of the failure	Ignition system failure; fuel supply failure; intake/exhaust system failure; mixer failure; regulator failure		

Flow chart

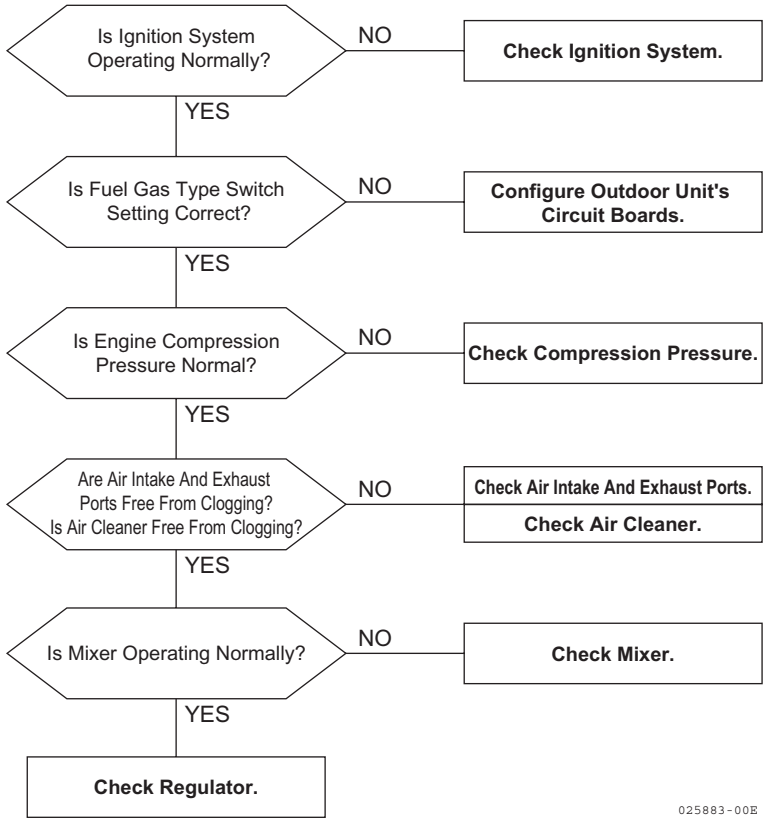

21	Clutch Failure	Error code	H1
Description of the failure	Sub-code 0: While the unit is running, PH-PL is higher than 500 kPa and the deviation from the target engine speed remains equal to or higher than 500 min^{-1} for 0.5 seconds. This condition is not judged until 20 seconds elapse after the clutch is operated. The alarm condition is judged 5 seconds after the clutch is operated. Sub-code 1: Within 5 seconds after the second clutch is engaged, the following conditions are detected in this exact order: 1) The engine speed momentarily drops by 150 min^{-1}; 2) the engine speed rises by 150 min^{-1}; 3) the clutch is engaged at an engine speed higher by 500 min^{-1}. Sub-code 2: While the unit is running, PH-PL remains below 300 kPa for 5 minutes.		
Possible causes of the failure	Pressure sensor failure; compressor failure; rib belt failure; compressor clutch failure; SV failure; four-way valve failure; short of refrigerant		

Flow chart

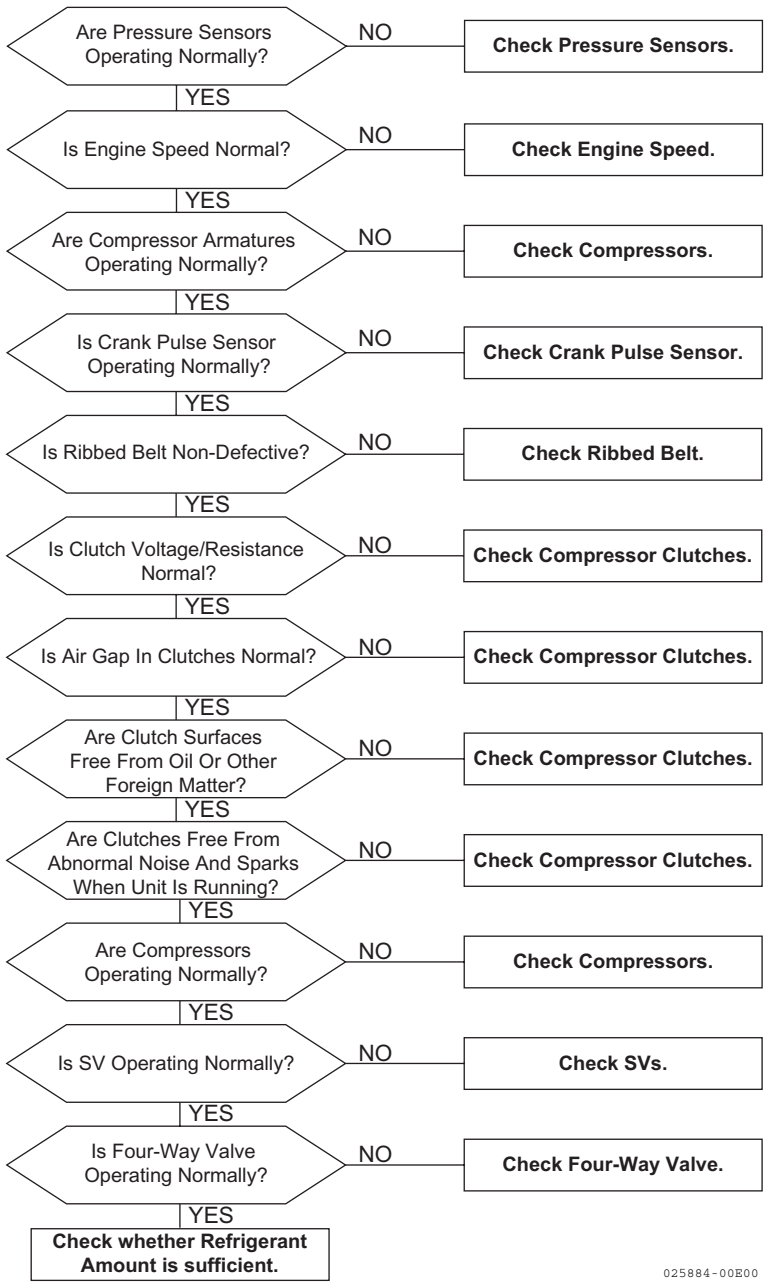

22	Indoor Unit Electronic Expansion Valve Failure	Error code	H6
Description of the failure	Sub-code 0: During cooling operation, the following conditions continue for 20 minutes: 1) SHS1 is equal to or lower than 2°C; 2) SHS2 is equal to or lower than 2°C; 3) the high-side pressure minus low-side pressure is equal to or higher than 1000 kPa.		
Possible causes of the failure	Indoor unit temperature sensor failure; indoor unit electronic expansion valve failure; high/low-side pressure sensor failure; intake air temperature sensor failure; harness failure; main circuit board failure; indoor unit filter/heat exchanger fouled; refrigerant overcharged		

Flow chart

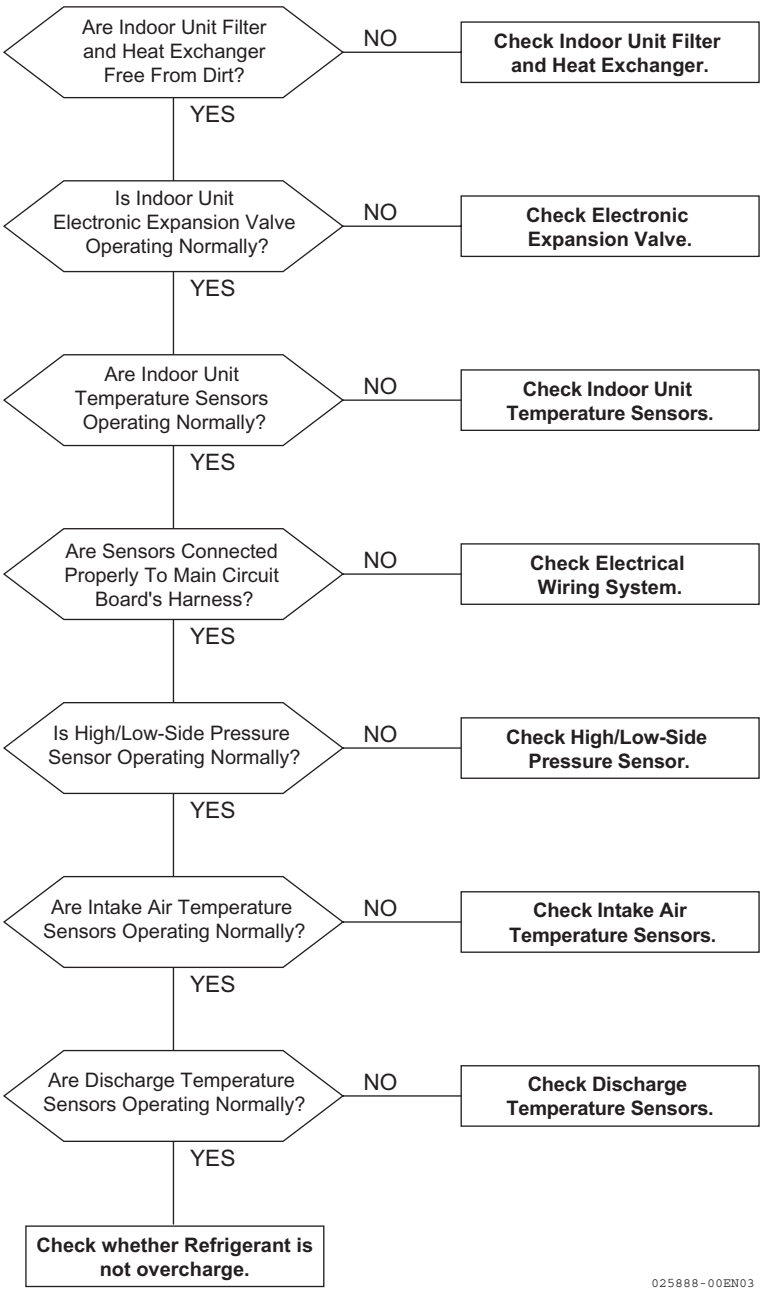

23	Air-Fuel Ratio Controller Failure	Error code	J1
Description of the failure	Sub-code 0: While the unit is running, the air-fuel ratio controller does not function properly. Sub-code 1: While the unit is running, the following conditions continue for 3 minutes: 1) the throttle valve opening degree is equal to or lower than 500 pulses; 2) the current speed is equal to or lower than 1150 min^{-1}; 3) the current speed is equal to or lower than the target speed minus 100 min^{-1}.		
Possible causes of the failure	Mixer malfunction		
Flow chart			

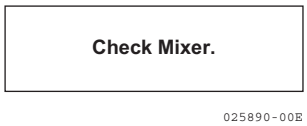

24	Intake Air Temperature Sensor 1 Disconnected / Shorted	Error code	J2
Description of the failure	Sub-code 0: While the unit is running, intake air temperature 1 is reported to be equal to 200°C (which means that intake air temperature sensor 1 is disconnected). Sub-code 1: While the unit is running, intake air temperature 1 is reported as 201°C (which means that intake air temperature sensor 1 is shorted). Sub-code 2: While the unit is running, intake air temperature 2 is reported as 200°C (which means that intake air temperature sensor 2 is disconnected). Sub-code 3: While the unit is running, intake air temperature 2 is reported as 201°C (which means that intake air temperature sensor 2 is shorted). Sub-code 4: While the unit is running, intake air temperature 3 is reported as 200°C (which means that intake air temperature sensor 3 is disconnected). Sub-code 5: While the unit is running, intake air temperature 3 is reported as 201°C (which means that intake air temperature sensor 3 is shorted). Sub-code 6: While the unit is running, intake air temperature 4 is reported as 200°C (which means that intake air temperature sensor 4 is disconnected). Sub-code 7: While the unit is running, intake air temperature 4 is reported as 201°C (which means that intake air temperature sensor 4 is shorted). Sub-code 8: While the unit is running, intake air temperature 5 is reported as 200°C (which means that intake air temperature sensor 5 is disconnected). Sub-code 9: While the unit is running, intake air temperature 5 is reported as 201°C (which means that intake air temperature sensor 5 is shorted).		
Possible causes of the failure	Intake air temperature sensor failure; harness failure; main circuit board failure; sub circuit board failure		
Flow chart			

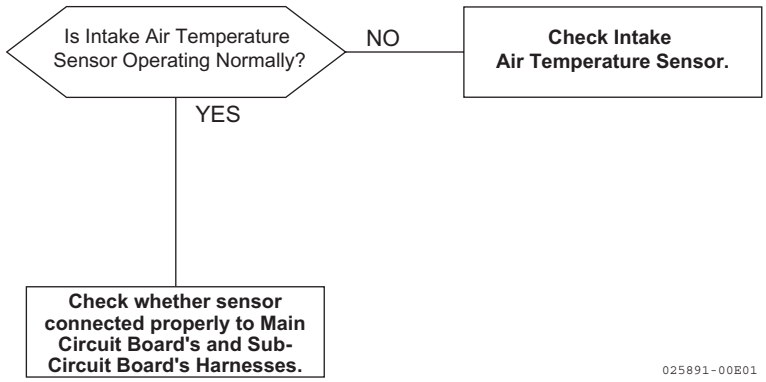

25	Outdoor Air Temperature Sensor Disconnected/ Shorted	Error code	J3
Description of the failure	Sub-code 0: While the unit is running, the outdoor air temperature is reported as 200°C (which means that the outdoor air temperature sensor is disconnected). Sub-code 1: While the unit is running, the outdoor air temperature is reported as 201°C (which means that the outdoor air temperature sensor is shorted).		
Possible causes of the failure	Outdoor air temperature sensor failure; harness failure; main circuit board failure		

Flow chart

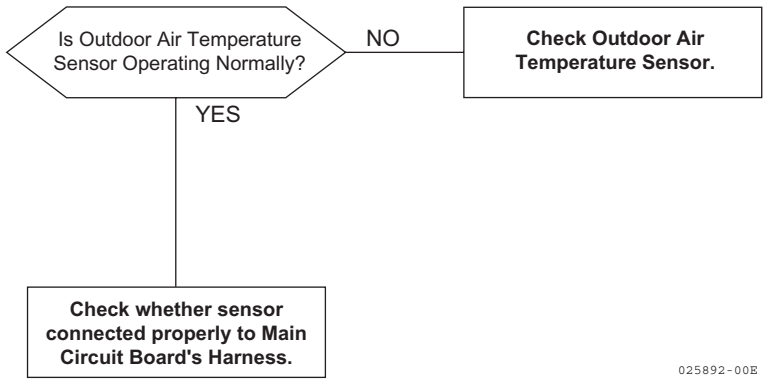

26	Outdoor Unit Electronic Expansion Valve Failure	Error code	J5
Description of the failure	Sub-code 0: During heating operation, the following conditions continue for 20 minutes: 1) SHS2 is equal to or lower than 2°C; 2) SHS2 is equal to or lower than 2°C; 3) SHS3 is higher than 3.5°C; 4) SHS4 is higher than 3.5°C; 5) the high-side pressure minus low-side pressure is equal to or higher than 1000 kPa; 6) EV1 is equal to or lower than 50 pulses; 7) SV8 is OFF. Sub-code 1: While the unit is running, the following conditions continue for 20 minutes: 1) SHS2 is equal to or lower than 2°C; 2) SHS4 is equal to or lower than 2°C; 3) SHS1 is higher than 3.5°C; 4) the high-side pressure minus low-side pressure is equal to or higher than 1000 kPa; 5) EV4 is equal to or lower than 50 pulses. Sub-code 2: While the unit is running, the following conditions continue for 20 minutes: 1) SHS2 is equal to or lower than 2°C; 2) SHS3 is equal to or lower than 2°C; 3) SHS1 is higher than 3.5°C; 4) the high-side pressure minus low-side pressure is equal to or higher than 1000 kPa; 5) EV5 is equal to or lower than 50 pulses. Sub-code 3: While the unit is running, the following conditions continue for 20 minutes: 1) SHS2 is equal to or lower than 2.0°C; 2) SHS1 is higher than 3.5°C; 3) the high-side pressure minus low-side pressure is equal to or higher than 1000 kPa; 4) EV6 is equal to or lower than 50 pulses.		
Possible causes of the failure	EV failure; low-side pressure sensor failure; rib belt broken; check valve leak; SV failure; four-way valve failure; SC coil failure; harness failure; main circuit board failure		

Flow chart

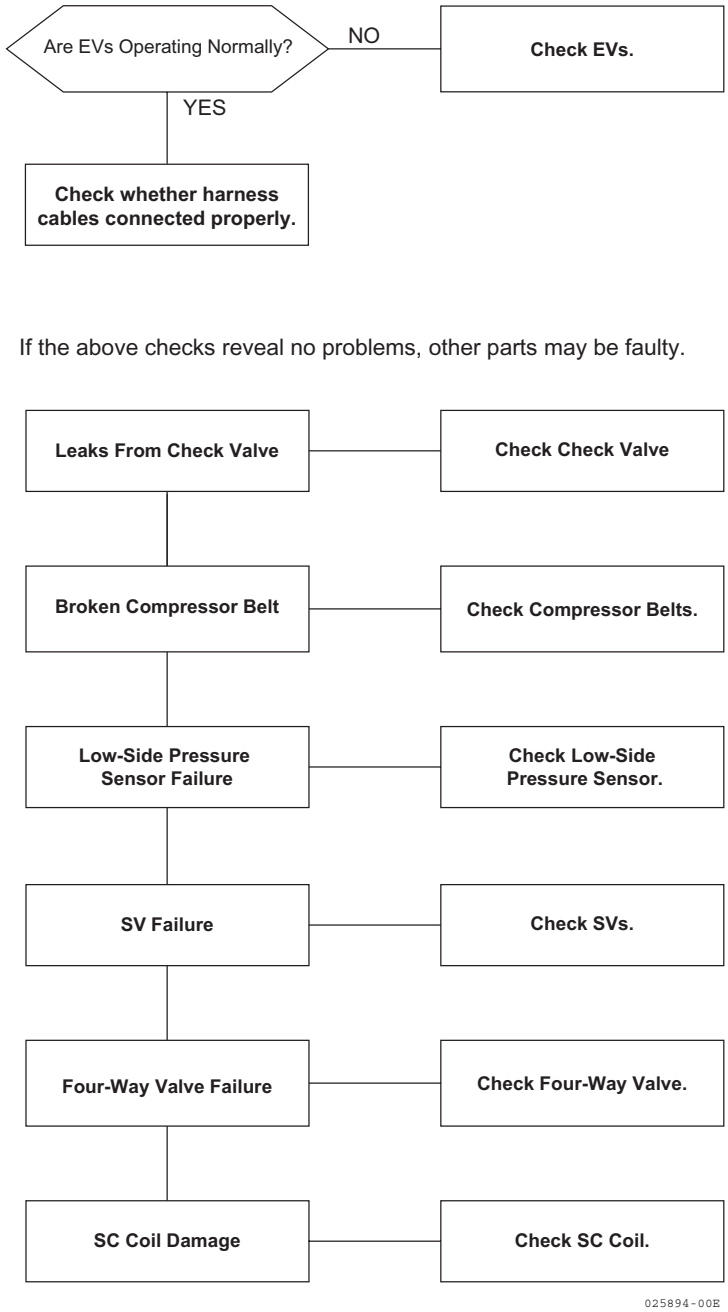

27	Oil Return Solenoid Valve Failure	Error code	J6
Description of the failure	Sub-code 0: While the unit is running, the SV3 closing failure flag is ON. Sub-code 1: While the unit is running, the SV3 opening failure flag is ON. Sub-code 2: While the unit is running, the SV4 closing failure flag is ON. Sub-code 3: While the unit is running, the SV4 opening failure flag is ON. Sub-code 4: While the unit is running, the oil return filter is clogged or the SV9 error flag is ON.		
Possible causes of the failure	SV failure; sensor failure; oil return refrigerant piping clogged; oil separator filter clogged; main circuit board failure; power supply circuit board failure		

Flow chart

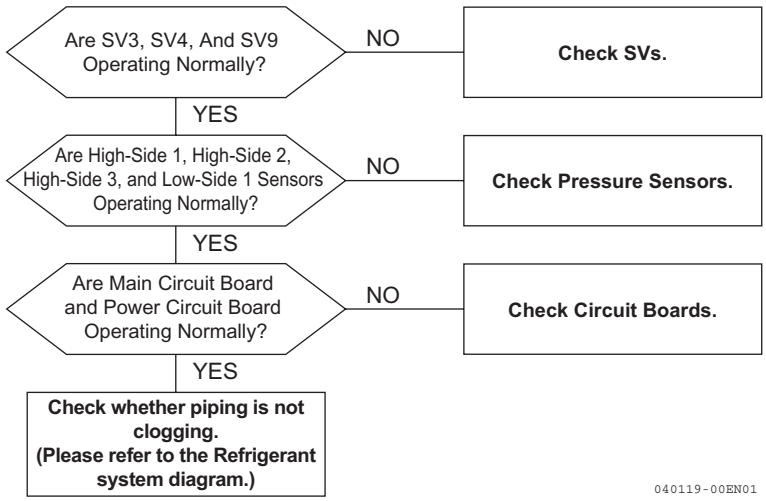

28	High-Side Pressure Sensor System Failure	Error code	J7
Description of the failure	Sub-code 0: While the unit is running, high-side pressure 1 is reported as 5000 kPa (which means that high-side pressure sensor 1 is shorted). Sub-code 1: While the unit is running, high-side pressure 1 is reported as 5100 kPa (which means that high-side pressure sensor 1 is disconnected). Sub-code 2: High pressure SW1 or high pressure SW2 turns OFF immediately before engine startup (which means that the high-side pressure switch is faulty). Sub-code 3: While the unit is running, high-side pressure 4 is reported as 5000 kPa (which means that high-side pressure sensor 4 is shorted). Sub-code 4: While the unit is running, high-side pressure 4 is reported as 5100 kPa (which means that high-side pressure sensor 4 is disconnected). Sub-code 6: While the unit is running, high-side pressure 2 is reported as 5000 kPa (which means that high-side pressure sensor 2 is shorted). Sub-code 7: While the unit is running, high-side pressure 2 is reported as 5100 kPa (which means that high-side pressure sensor 2 is disconnected). Sub-code 8: While the unit is running, high-side pressure 3 is reported as 5000 kPa (which means that high-side pressure sensor 3 is shorted). Sub-code 9: While the unit is running, high-side pressure 3 is reported as 5100 kPa (which means that high-side pressure sensor 3 is disconnected).		
Possible causes of the failure	High-side pressure sensor failure; harness failure; main circuit board failure; high-side pressure switch failure; sub circuit board failure		

Flow chart

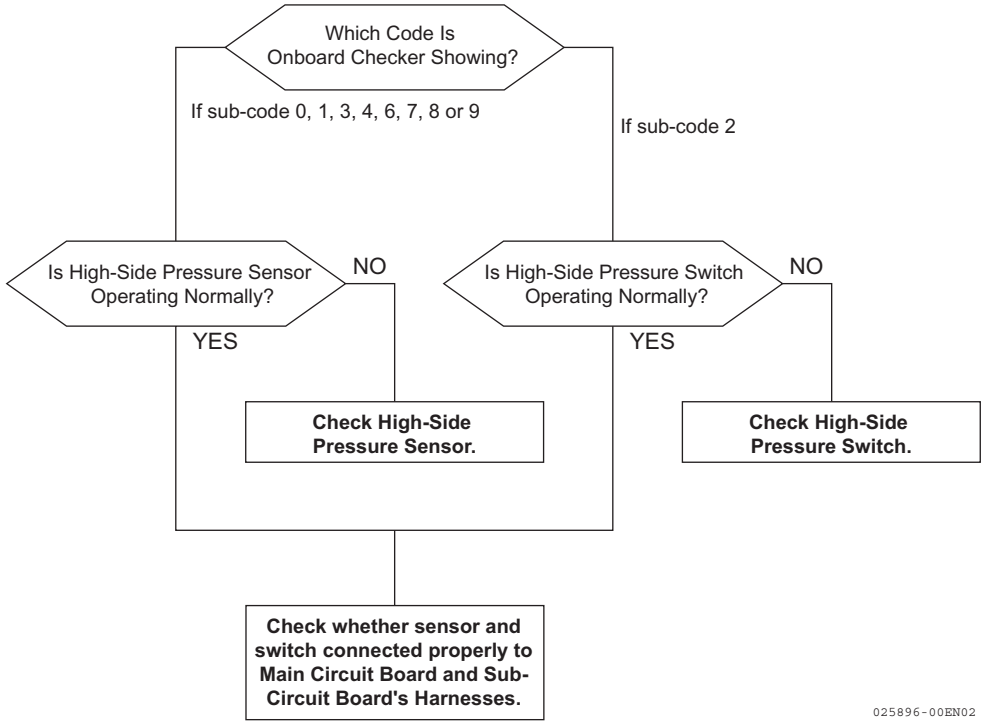

29	Exhaust Temperature Sensor Disconnected	Error code	J8
Description of the failure	Sub-code 0: While the unit is running, the following conditions continue for 5 minutes: 1) The engine speed is equal to or higher than 1400 min^{-1}; 2) the engine load is equal to or higher than 0.3 MPa; 3) the exhaust temperature is equal to or lower than 160°C.		
Possible causes of the failure	Exhaust temperature sensor failure; harness failure; main circuit board failure; fuel gas type setting incorrect; memory switches misconfigured		

Flow chart

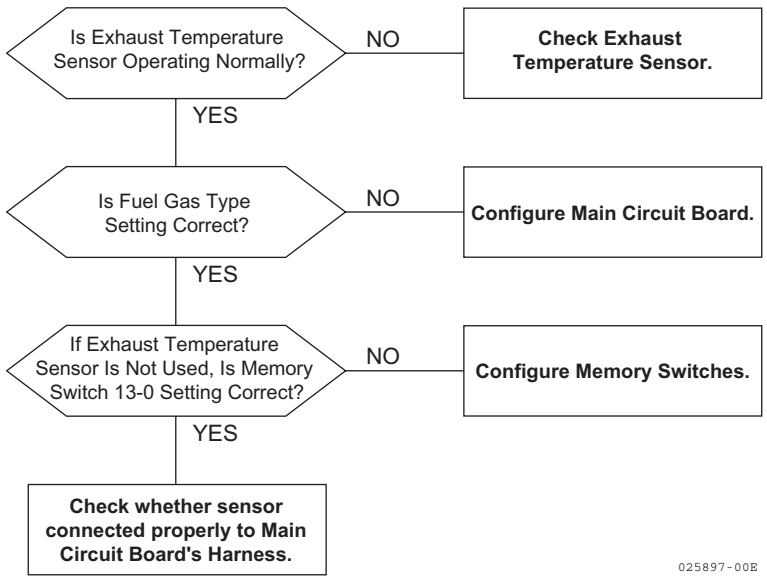

30	Low-Side Pressure Sensor Disconnected/ Shorted	Error code	J9
Description of the failure	Sub-code 0: While the unit is running, the low-side pressure is reported as 5000 kPa (which means that the low-side pressure sensor is shorted). Sub-code 1: While the unit is running, the low-side pressure is reported as 5100 kPa (which means that the low-side pressure sensor is disconnected).		
Possible causes of the failure	Low-side pressure sensor failure; harness failure; main circuit board failure		

Flow chart

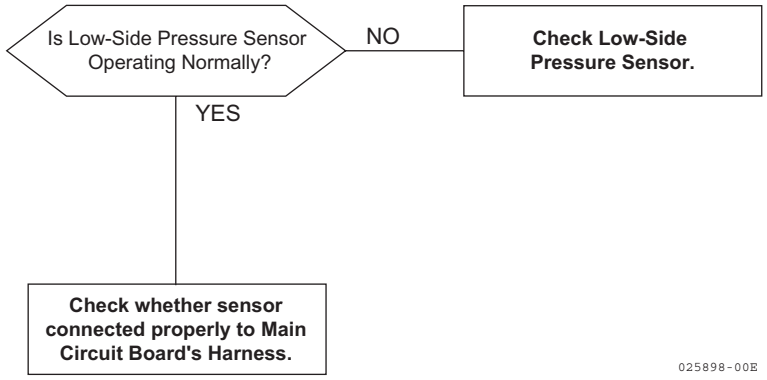

31	Compressor Automatic Emergency Run	Error code	JA
Description of the failure	Sub-code 0: Changes from E0-0 (engine fails to start) or E2-0 (engine stall) to compressor automatic emergency run (compressor 1 failure). Sub-code 1: Changes from E0-0 (engine fails to start) or E2-0 (engine stall) to compressor automatic emergency run (compressor 2 failure). Sub-code 2: Changes from E6-2 (abnormal discharge temperature) to compressor automatic emergency run (compressor 1 failure). Sub-code 3: Changes from E6-3 (abnormal discharge temperature) to compressor automatic emergency run (compressor 2 failure). Sub-code 4: Changes from H1-2 (clutch failure) to compressor automatic emergency run (compressor 1 failure). Sub-code 5: Changes from H1-2 (clutch failure) to compressor automatic emergency run (compressor 2 failure). Sub-code 6: Changes from F6 (discharge temperature sensor failure) to compressor automatic emergency run. Sub-code 7: Changes from J6 (oil return solenoid valve failure) to compressor automatic emergency run. Sub-code 8: Changes from J7 (high-side pressure sensor system failure) or JH (pressure sensor failure) to compressor automatic emergency run. Sub-code 9: Changes from JJ (oil temperature sensor failure) to compressor automatic emergency run.		
Possible causes of the failure	Engine fails to start up; engine stall; abnormal discharge temperature; clutch failure; discharge temperature sensor failure; oil return solenoid valve failure; high-side pressure sensor system failure; pressure sensor failure; oil temperature sensor failure		

Flow chart

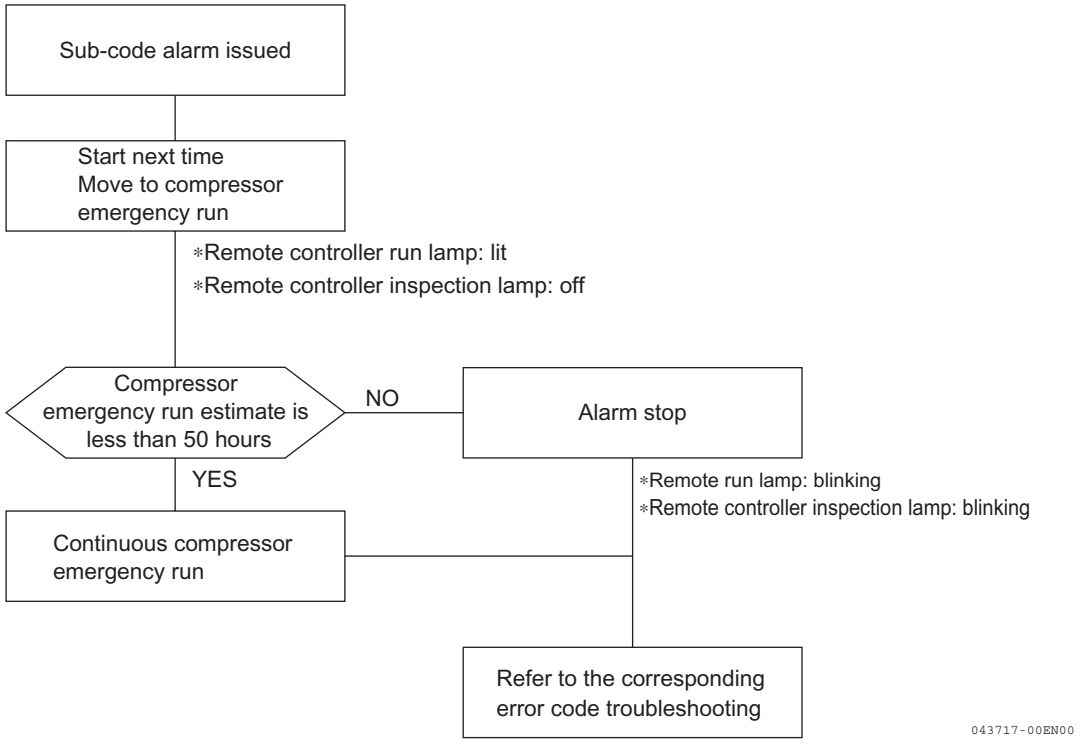

See the troubleshooting for the corresponding error code.

32	Pressure Sensor Failure	Error code	JH
Description of the failure	Sub-code 0: While the unit is stopped, the following conditions continue for 20 seconds: 1) High-side pressure 1 minus the low-side pressure is equal to or higher than 170 kPa; 2) high-side pressure 1 is equal to or lower than 3300 kPa; 3) the low-side pressure is equal to or lower than 3300 kPa. Sub-code 1: While the unit is stopped, the following conditions continue for 20 seconds: 1) High-side pressure 1 minus high-side pressure 2 is equal to or higher than 170 kPa; 2) high-side pressure 1 minus the low-side pressure is lower than 170 kPa; 3) high-side pressure 1 is equal to or lower than 3300 kPa; 4) the low-side pressure is equal to or lower than 3300 kPa. Sub-code 2: While the unit is stopped, the following conditions continue for 20 seconds: 1) High-side pressure 1 minus high-side pressure 3 is equal to or higher than 170 kPa; 2) high-side pressure 1 minus the low-side pressure is lower than 170 kPa; 3) high-side pressure 1 is equal to or lower than 3300 kPa; 4) the low-side pressure is equal to or lower than 3300 kPa.		
Possible causes of the failure	High/low-side pressure sensor failure; main circuit board failure; EV failure		

Flow chart

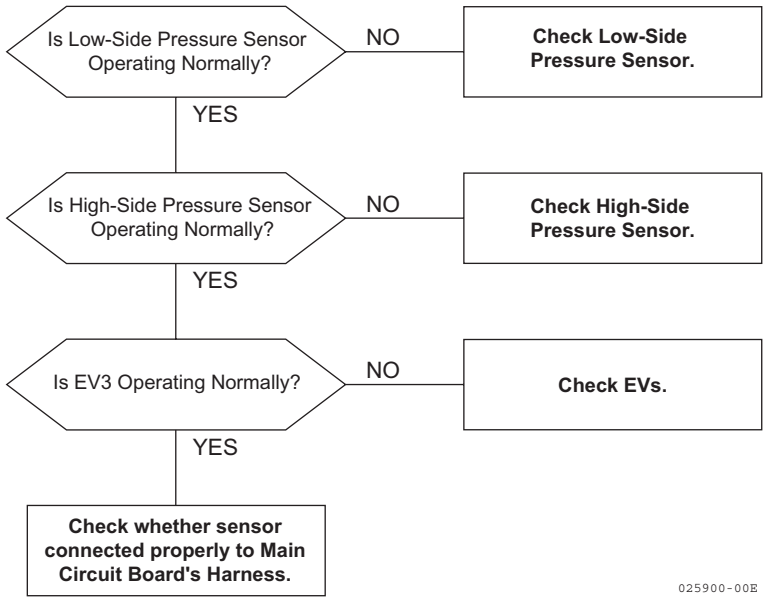

33	Oil Temperature Sensor Disconnected/Shorted	Error code	JJ
Description of the failure	Sub-code 0: After 20 minutes have elapsed since the start of operation, clutch 1 is ON and oil temperature 1 remains equal to or lower than -30°C for 1 minute. Sub-code 1: While the unit is running, oil temperature 1 is reported as 201.0°C (which means that oil temperature sensor 1 is shorted). Sub-code 2: After 20 minutes have elapsed since the start of operation, clutch 2 is ON and oil temperature 2 remains equal to or lower than -30°C for 1 minute. Sub-code 3: While the unit is running, oil temperature 2 is reported as 201.0°C (which means that oil temperature sensor 2 is shorted). Sub-code 4: After 20 minutes have elapsed since the start of operation, oil temperature 3 remains equal to or lower than 0.0°C for 1 minute. Sub-code 5: While the unit is running, oil temperature 3 is reported as 201.0°C (which means that oil temperature sensor 3 is shorted). Sub-code 6: While the unit is running, oil temperature 4 is reported as 200.0°C (which means that oil temperature sensor 4 is disconnected). Sub-code 7: While the unit is running, oil temperature 4 is reported as 201.0°C (which means that oil temperature sensor 4 is shorted).		
Possible causes of the failure	Oil temperature sensor failure; harness failure; main circuit board failure		

Flow chart

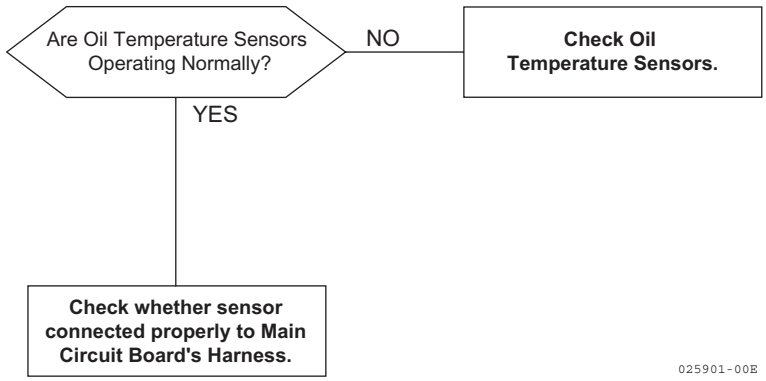

34	Receiver Temperature Sensor System Failure	Error code	JF
Description of the failure	Sub-code 0: While the unit is running, receiver temperature 31 is reported as 200°C (which means that receiver temperature sensor 31 is disconnected). Sub-code 1: While the unit is running, receiver temperature 31 is reported as 201°C (which means that receiver temperature sensor 31 is shorted).		
Possible causes of the failure	Receiver temperature sensor failure; harness failure; main circuit board failure		

Flow chart

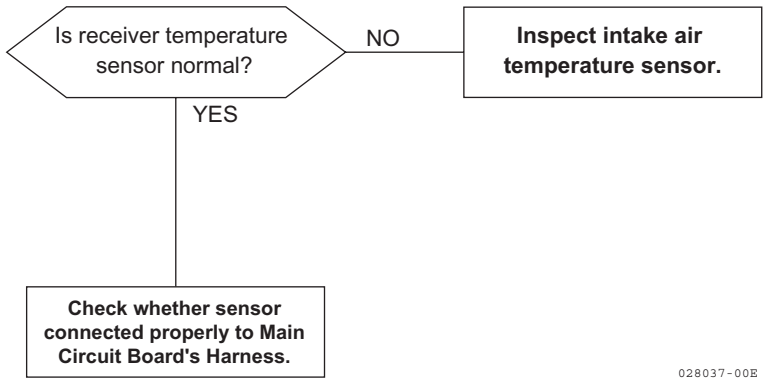

35	Abnormal Exhaust Temperature	Error code	L1
Description of the failure	Sub-code 0: While the unit is running, the exhaust temperature rises to or above 650°C.		
Possible causes of the failure	Misfire (ignition system failure); mixer failure; fuel gas type setting incorrect; engine oil up; engine oil down; exhaust temperature sensor failure; engine cooling failure; flammable gas contained in intake air; catalyst failure; harness failure; main circuit board failure		

Flow chart

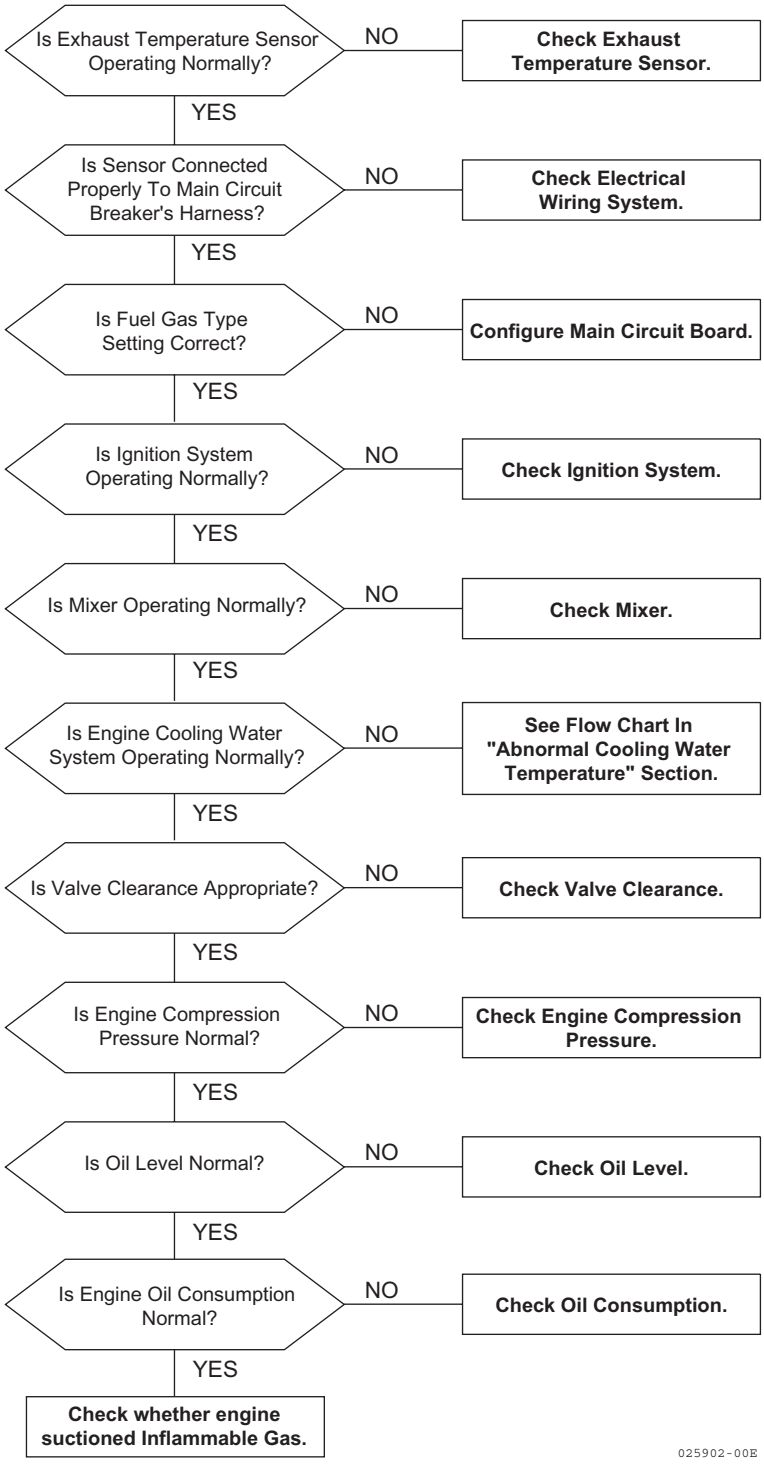

36	Periodic Inspection Reminder (Note: This is not an error message)	Error code	L8
Description of the failure	Sub-code 0: Engine oil replacement judgment Sub-code 1: Engine oil refill judgment		
Possible causes of the failure	Maintenance time reached; operating hour meter not reset after previous maintenance; fuel gas type setting incorrect		

Flow chart

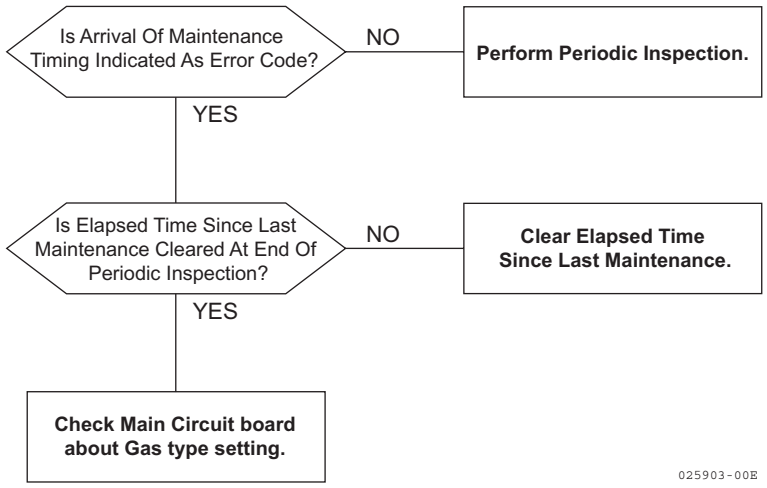

- Reminder display only:
  While the unit is running, the elapsed time since the last maintenance exceeds 9800 hours.
- Reduced-performance mode at intervals of 50 hours:
  While the unit is running, the elapsed time since the last maintenance exceeds 10000 hours.
- Reduced-performance mode at intervals of 2 hours:
  While the unit is running, the elapsed time since the last maintenance exceeds 10300 hours.

37	Starter Relay Failure	Error code	LE
Description of the failure	Sub-code 0: M-terminal of the starter stays ON for 15 seconds. Sub-code 1: M-terminal of the starter stays ON for 3 seconds while the engine speed is equal to or higher than 800 min^{-1}.		
Possible causes of the failure	Starter relay fused; malfunction due to noise; main circuit board failure; M-terminal failure		

Flow chart

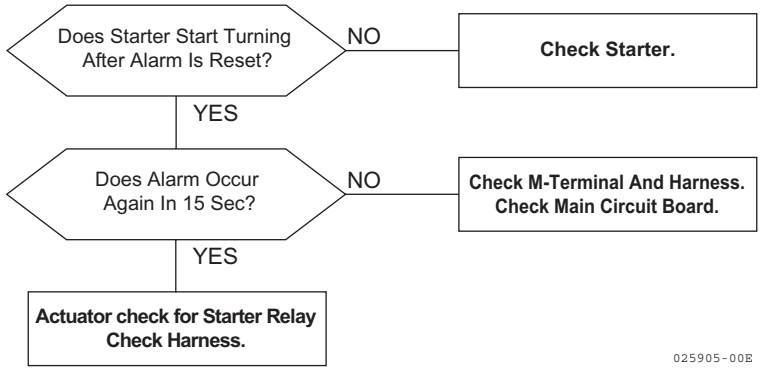

38	BS Unit Circuit Switch Failure	Error code	LF
Description of the failure	Sub-code 0: With PH higher than 2.0 MPa and PH-PL higher than 1.2 MPa, condition (1) or (2) below continues for 6 minutes: (1) With the indoor unit heating thermostat ON, intake temperature ≥ gas pipe temperature ≥ liquid pipe temperature; and gas pipe temperature ≤ high pressure side saturation temperature. (2) With the indoor unit cooling thermostat ON, gas pipe temperature ≥ liquid pipe temperature ≥ intake temperature; and gas pipe temperature ≥ high pressure side saturation temperature.		
Possible causes of the failure	BS unit expansion valve failure; BS unit circuit board failure; piping clogged; SV failure; indoor unit thermistor failure		

Flow chart

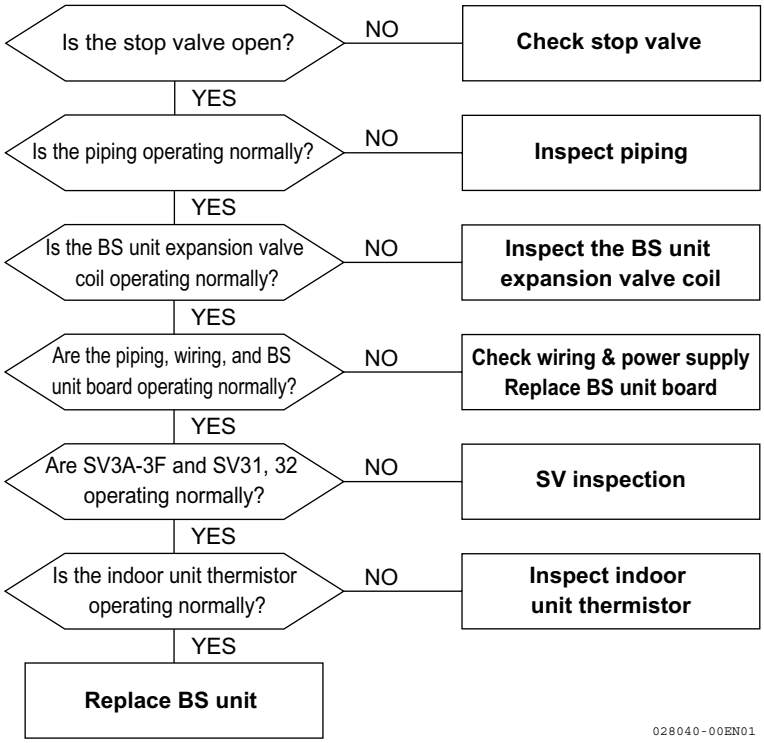

39	Too Many Indoor Units Connected	Error code	P0
Description of the failure	Sub-code 0: The number of connected indoor units is beyond the upper limit specific to the outdoor unit model.		
Possible causes of the failure	Upper limit of connected indoor units exceeded; CPU mismatch; communication line connection failure; communication line incorrectly installed		

Flow chart

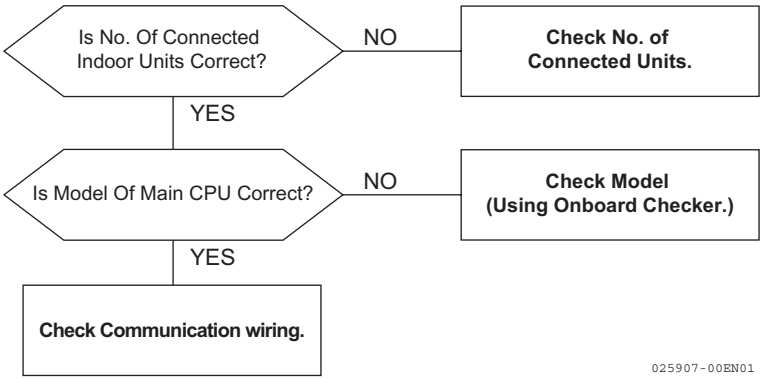

40	Total Indoor Unit Capacity Too Large	Error code	P3
Description of the failure	Sub-code 0: The total capacity of connected indoor units is beyond the upper limit specific to the outdoor unit model.		
Possible causes of the failure	Upper limit of total indoor unit capacity exceeded; DIP switches misconfigured (for outdoor/indoor units); outdoor unit memory switches misconfigured; CPU mismatch		

Flow chart

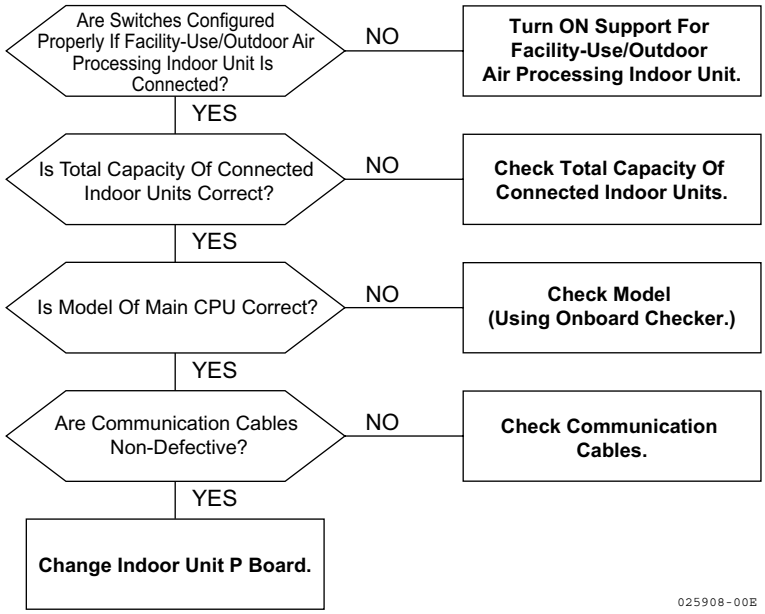

41	Inter-CPU Communication Failure/ Software Mismatch/Abnormal ROM	Error code	U2
Description of the failure	Sub-code 0: Unable to communicate between I/O CPUs for 20 seconds. Sub-code 2: Unable to communicate between ignition CPUs for 20 seconds. Sub-code 3: Abnormal I/O CPU ROM Sub-code 5: Abnormal ignition CPU ROM		
Possible causes of the failure	CPU program write error; power supply circuit board failure; main circuit board failure; T phase missing		

Flow chart

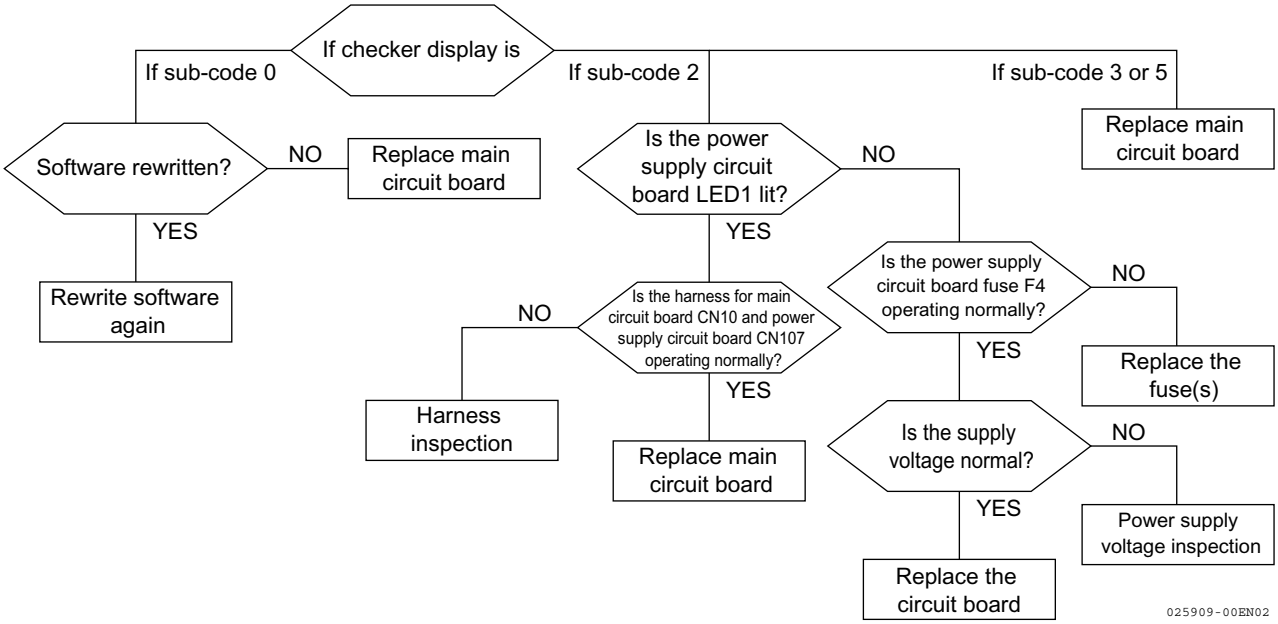

42	Inter-Unit Communication Failure	Error code	U3
Description of the failure	Sub-code 0: Unable to communicate between DCBL circuit boards for 20 seconds or longer Sub-code 1: Unable to communicate between sub circuit boards for 20 seconds or longer Sub-code 2: Abnormal sub circuit board ROM		
Possible causes of the failure	Power supply failure; harness failure; main circuit board failure; power supply circuit board failure; DCBL circuit board failure; sub circuit board failure		

Flow chart

Sub-Code 0

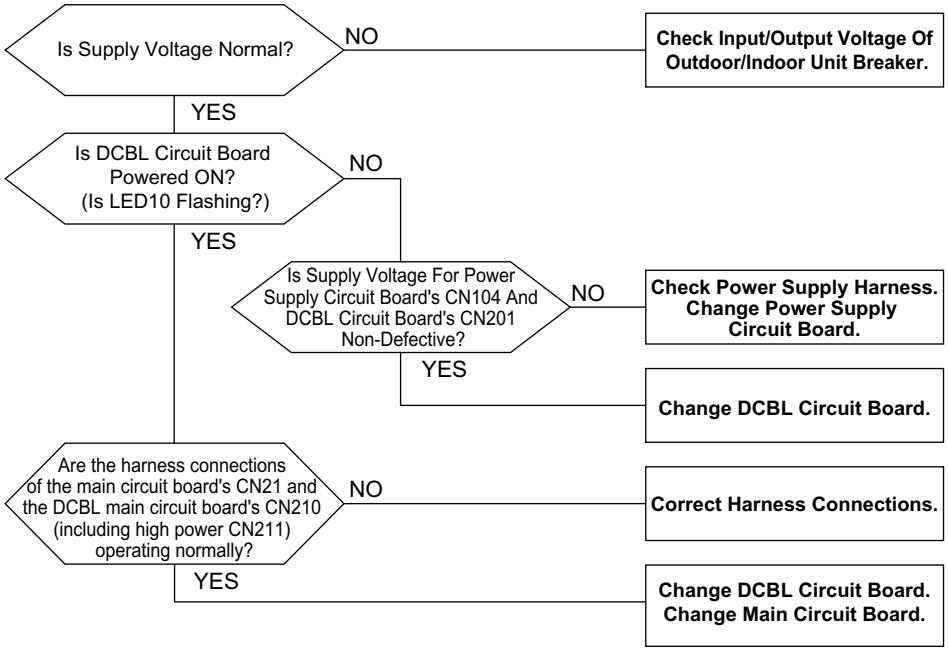

Sub-Code 1

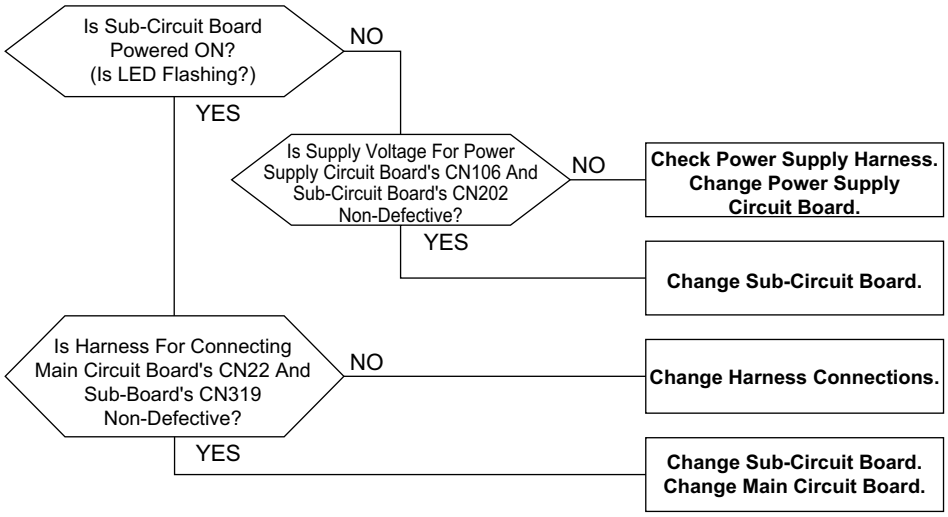

Sub-Code 2

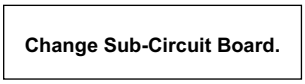

025910-01EN02

43	Outdoor/Indoor Unit Transmission Failure	Error code	U4
Description of the failure	Sub-code 0: The outdoor and indoor units are unable to communicate with each other within 50 seconds after power-ON or unable to communicate with each other within 3 minutes after they are connected over the communication link (which means that all the indoor units have a transmission failure).		
Possible causes of the failure	DIP switches misconfigured; indoor unit power supply not turned ON; fuse failure; communication line connection failure; communication line incorrectly installed		

Flow chart

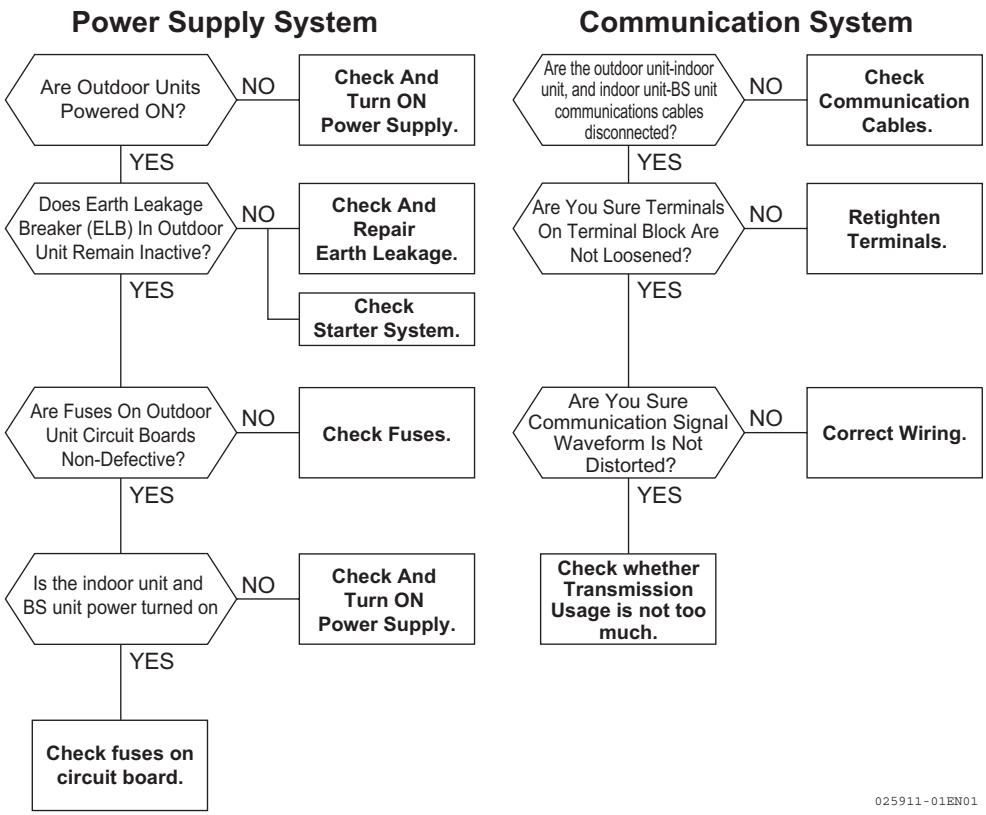

44	Indoor Unit and Remote Control Mismatch	Error code	UA
Description of the failure	Sub-code 2: The number of connected remote control units does not match the number of supported remote control units specific to the model. Sub-code 5: Unable to receive signals from the ignition CPU when the power is turned ON.		
Possible causes of the failure	CPU mismatch; indoor/outdoor unit connection failure; communication line connection failure; remote controller connection failure; software version mismatch; outdoor unit mismatch		
Flow chart			

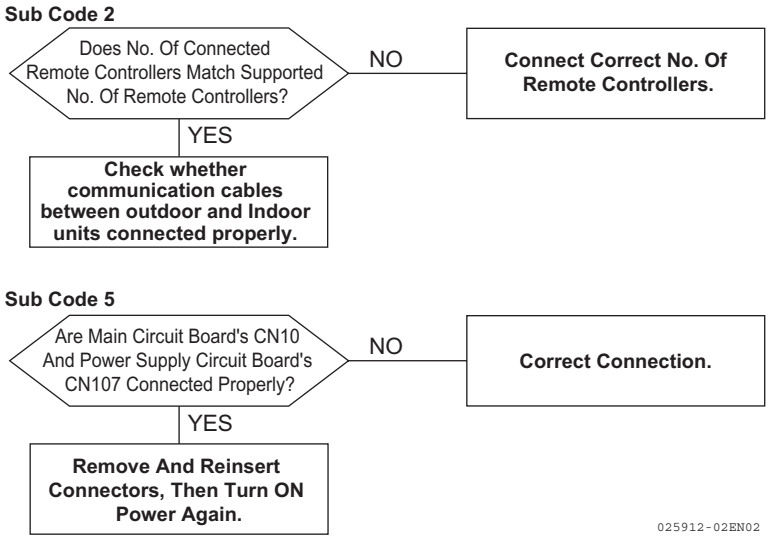

Part 5
Parts Inspection

1. Inspecting the Outdoor Unit 170
1.1 Safety Precautions for Inspecting or Servicing the Outdoor Unit 170
1.2 Inspecting the Starter System 171
1.3 Inspecting the Fuel Control System 173
1.4 Inspecting the Mixer System 174
1.5 Inspecting the Ignition System 176
1.6 Inspecting the Regulator 179
1.7 Inspecting the Valve Clearance.....179
1.8 Inspecting the Compression Pressure 180
1.9 Inspecting the Belt.....180
1.10 Inspecting the Air Cleaner.....181
1.11 Inspecting the Breather Hose.....181
1.12 Inspecting the Engine Oil Level.....182
1.13 Inspecting Refrigerating Machine Oil and Refrigerant.....183
1.14 Inspecting the Cooling Water Filter 184
1.15 Checking the Cooling Water System for Water Leaks 184
1.16 Inspecting the Cooling Water Level.....185
1.17 Inspecting the Water Motor-operated Valve.....185
1.18 Inspecting the Thermostat.....186
1.19 Inspecting the Cooling Water Concentration.....187
1.20 Inspecting the Oil Pressure Switch.....187
1.21 Inspecting the Cooling Water Temperature Sensor 187
1.22 Inspecting the Exhaust Temperature Sensor.....188
1.23 Inspecting the Compressor 189
1.24 Inspecting the Compressor Clutch 190
1.25 Inspecting the Solenoid Valves 191
1.26 Inspecting the Outdoor Fan Motor.....192
1.27 Inspecting the Refrigerant Amount.....193
1.28 Inspecting the Check Valve.....194
1.29 Inspecting the Electronic Expansion Valve 195
1.30 Checking Stop Valve Operation 196
1.31 Inspecting the Four-way Valve.....197
1.32 Inspecting the SC Coil.....197
1.33 Inspecting the Refrigerant System Sensors.....198
1.34 Inspecting the Outdoor Unit's Circuit Boards and Power Supply System 200
1.35 Inspecting the Communication Cables.....200
1.36 Inspecting the Heaters 201

1. Inspecting the Outdoor Unit

1.1 Safety Precautions for Inspecting or Servicing the Outdoor Unit

Table 5.1/ Safety precautions for inspecting or servicing the outdoor unit

⚠ **Warning**	The outdoor unit must be stopped before and during inspection. Everyone should be warned that the outdoor unit is under inspection and directed never to operate the outdoor unit via a remote control unit or by any other means.
	Before inspecting or servicing the outdoor unit, never forget to turn OFF the outdoor unit's power supply breaker.
	Any inspection tasks on the primary side of the outdoor unit's power supply breaker must be preceded by shutting off the primary side power supply (the main power supply of the customer's distribution board).
	If you must inspect the outdoor unit with the power ON, take extreme care to keep away from any energized parts or rotating parts.
⚠ **Caution**	Since some parts (such as engine parts) contained in the outdoor unit remain hot for some time after the outdoor unit is stopped, take extreme care to prevent burns when inspecting or servicing the outdoor unit's internal components.
	Make sure that the wiring terminals do not touch the circuit board or body, and cover the removed terminals, for example by using insulation tape.
General precautions	After completing inspection or servicing, be sure to perform sufficient actuator checks and test runs to ensure that operation is normal.
	Use proper tools when you perform servicing tasks.
	Take care in handling circuit boards. Particularly when you plug or unplug a connector, gently support the circuit board with your fingers to minimize the force applied to the circuit board.
	Do not attempt to pull out connectors and harnesses when you unplug them. When plugging in a connector, make sure that the lock jaw is perfectly locked.

1.2 Inspecting the Starter System

■ **Activation timing**

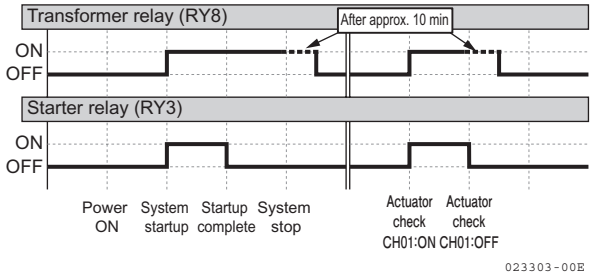

■ **Output voltage**

Parts to inspect	Measuring points	During system stop After startup (while running)	At system startup (with actuator CH01 ON)
Transformer relay	Between power supply circuit board's RY8 terminals	During stop: No continuity * While running: Continuity exists	Continuity exists
Starter transformer	Between R and T terminals on the primary side	During stop: 0 V* While running: 200 V AC	200 V AC
Self-starter motor	Between S terminal and ground	During stop: 0 V While running: 0 V	12 V DC
	Between B terminal and ground	During stop: 0 V While running: 12 V DC	12 V DC

∗ This should be tested approximately 10 minutes after stopping (because the voltage immediately after stopping will be the same as while running).

1. Using a tester, check if the output voltage requirements specified above are met.
2. If the voltage is significantly different than specified above, stop the system using the onboard checker and wait for 5 minutes; then, with the power OFF, check the harness for continuity and the junction connectors for contact failure using a tester.
3. If the harness and connectors are OK, then check each component.

[Note] Perform voltage checks by applying a tester to the back face of each connector, rather than unplugging the connector.

■ **Fuses on the harness**

Inspect the fuses on the harness to make sure they are not blown.

Part	Purpose	Capacity
On the harness	For S terminal	32 V DC/30 A
	For M terminal	32 V DC/3 A

■ **Inspecting the starter transformer**

Inspect the transformer by measuring the resistance between its terminals.

Measuring points	Measured value *
Between red and black terminals on the primary side	520 mΩ
Between blue terminals on the secondary side	40 mΩ

∗ At 20°C (reference value)

■ **Inspecting the reactor**

Inspect the reactor by measuring the resistance between its terminals.

Measuring points	Model	Measured value (Ω) *
Between terminals *	GYEQ20AN	0.17
	GYEQ30AN	0.06

∗ At 20°C (reference value)

■ Inspecting the self-starter motor

Inspect the self-starter motor by measuring the resistance between its terminals and the ground.

Measuring points	Measured value
Between S terminal and ground	0.2 Ω
Between M terminal and ground	0.2 Ω

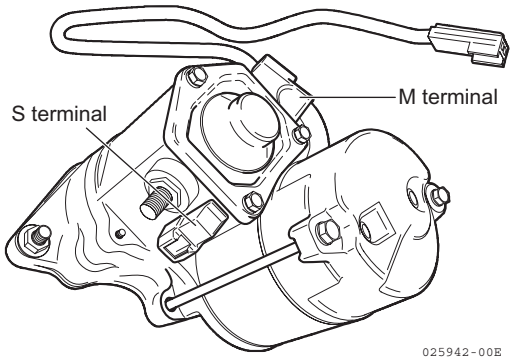

Check if the ring gear and self-starter motor pinion engage smoothly while operating them with the actuator check function. If they do not smoothly engage or the ring gear end face is damaged, inspect the self-starter motor itself as instructed above.

1.3 Inspecting the Fuel Control System

■ **Output voltage**

Parts to inspect	Measuring points	During system stop	While system running (with actuator check ON)
Gas solenoid valve 1	Between main circuit board's CN9-1 and -4	0 V	CH03 12 V DC
Gas solenoid valve 2	Between main circuit board's CN9-3 and -5	0 V	CH04 12 V DC

■ **Inspecting the gas solenoid valves**

Inspect the gas solenoid valves by measuring the resistance between their terminals.

Measuring points	Measured value
Between gas solenoid valve terminals	16.7 Ω

1.4 Inspecting the Mixer System

■ **Output voltage**

Parts to inspect	Measuring points	Power supply ON
Throttle valve	Between main circuit board's CN8-1 and CN1-3	12 V DC
	Between main circuit board's CN8-3 and CN1-3	12 V DC
Fuel control valve	Between main circuit board's CN8-2 and CN1-3	12 V DC
	Between main circuit board's CN8-4 and CN1-3	12 V DC

1. Using a tester, check if the output voltage requirements specified above are met.
2. If the voltage is significantly different than specified above, stop the system using the onboard checker and wait for 5 minutes; then, with the power OFF, check the harness for continuity and the junction connectors for contact failure using a tester.
3. If the harnesses and connectors are OK, then check each component.

■ **Inspecting the mixer**

Inspect the mixer by measuring the resistance between its terminals.

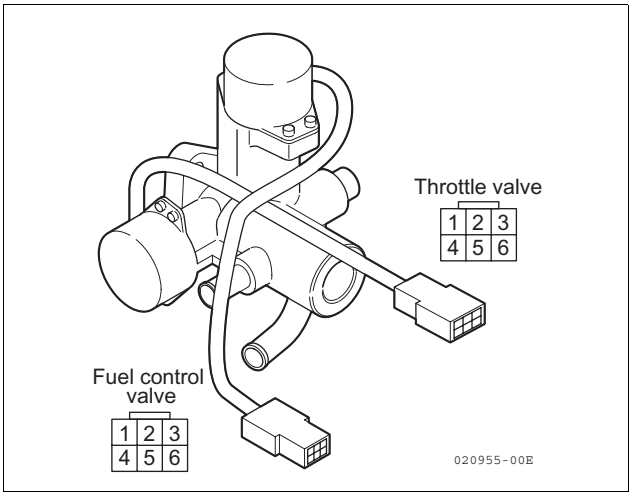

Throttle valve		Fuel control valve	
Measuring points	Measured value	Measuring points	Measured value
Between terminals #2 (red) and #4 (white)	120 Ω	Between terminals #2 (red) and #4 (white)	120 Ω
Between terminals #2 (red) and #6 (brown)	120 Ω	Between terminals #2 (red) and #6 (brown)	120 Ω
Between terminals #1 (black) and #3 (blue)	120 Ω	Between terminals #1 (black) and #3 (blue)	120 Ω
Between terminals #1 (black) and #5 (yellow)	120 Ω	Between terminals #1 (black) and #5 (yellow)	120 Ω

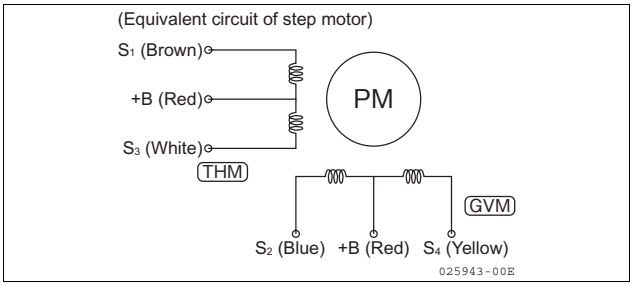

■ Adjusting the mixer

At a time other than a test run, inspect the mixer to check if the O_2 concentration is within the standard adjustment range. If beyond the range, adjust the O_2 concentration using the needle regulator valve (MAS).

[Caution]

- Check if the DIP switches on the outdoor unit's main circuit board have been correctly configured in accordance with the fuel gas type.
- Any adjustments made should be based on the O_2 concentration.

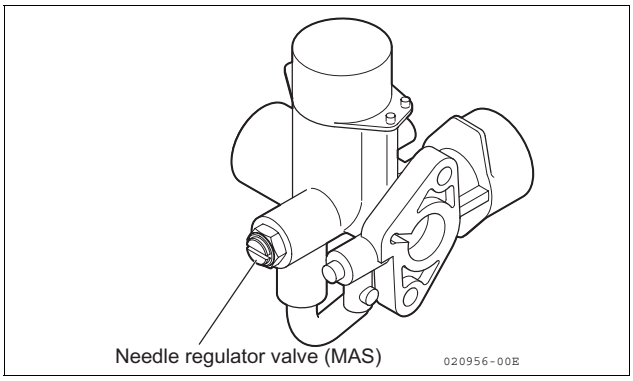

Fuel gas type	3GPH88				4GPH88			
	O_2 concentration ±1%			Engine speed (min^{-1})	O_2 concentration ±1%			Engine speed (min^{-1})
	Throttle valve opening degree				Throttle valve opening degree			
	100	150	200		100	150	200	
Natural gas	5.5	5.6	5.2	1600	6.0	5.6	5.1	1600
Propane gas	8.5	8.5	8.3		7.8	8.5	8.4	
Butane gas	5.2	5.3	5.4		4.7	5.7	5.6	

1.5 Inspecting the Ignition System

■ **Output voltage**

Parts to inspect		Measuring points	During system stop *	While system is running (with actuator check CH1 ON)
Ignition power supply	Primary side	Between starter transformer's input terminals	0 V	200 V AC
	Secondary side	Between main circuit board's CN20-5 and -6	0 V	14 V DC
		Between power supply circuit board's CN105-1 and -3	0 V	14 V AC
		Between power supply circuit board's CN107-1 and -2	0 V	14 V DC

* This should be tested approximately 10 minutes after stopping (because the voltage immediately after stopping will be the same as while running).

1. Using a tester, check if the output voltage requirements specified above are met.
2. If the voltage is significantly different than specified above, stop the system using the onboard checker and wait for 5 minutes; then, with the power OFF, check the harness for continuity and the junction connectors for contact failure using a tester.
3. If the harnesses and connectors are OK, then check each component.

■ **Inspecting the ignition timing**

- With the engine running, clip the plug cord of cylinder No.1 with the timing light clip. The timing light will begin flashing. Point the flashing light to the flywheel circumference and you will be able to determine the ignition timing of cylinder No.1 based on the position where the flywheel tick mark comes to rest.
- Check the ignition timing of other cylinders by repeating this procedure.

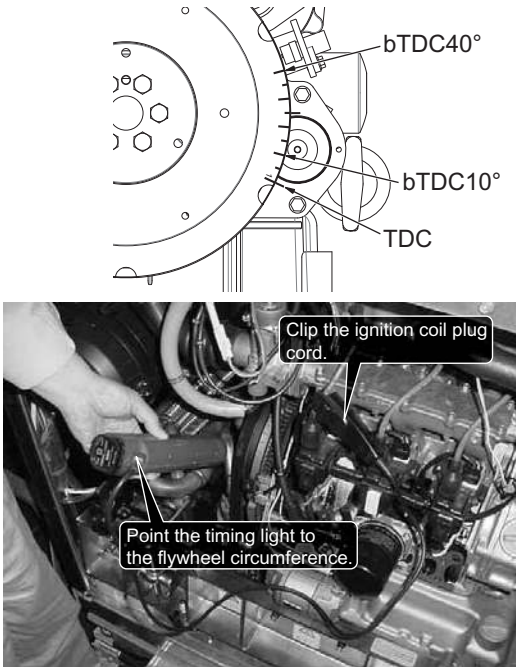

[If the ignition timing significantly differs:]

- Check the crank pulse sensor and cam pulse sensor for any gap; the harnesses and connectors for contact failure; and the signal lines for any noise due to their overlap with the power supply lines.
- Make sure that the main CPU is correct for the current model.

[If the timing light fails to flash:]

If no problems are found after checking the above, replace the main circuit board and/or power supply circuit board.

■ Inspecting the ignition coil

Inspect the ignition coil by measuring the resistance between its primary side terminals.

Measuring points	Measured value
Between terminals	0.7 Ω

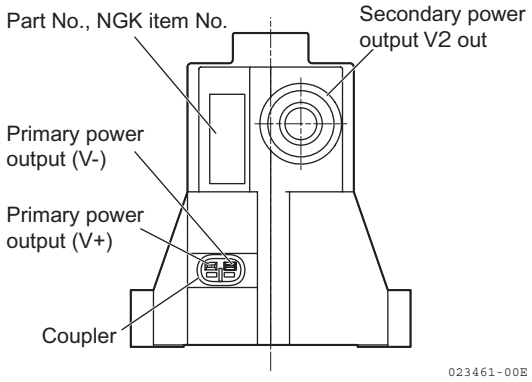

[Caution]

- Check if the plug caps and cords are correctly connected.
- Check if the primary side terminal connectors are in perfect contact.

■ Inspecting the crank pulse sensor

Inspect the crank pulse sensor by measuring the resistance between its terminals. Check the sensor and flywheel for any gap.

Measuring points	Measured value
Between terminals	515±35 Ω
Gap between sensor and flywheel	0.7 to 1.1 mm

∗ Make sure that the starter cable is not running close.
If so, fix it using clamps to keep a distance.

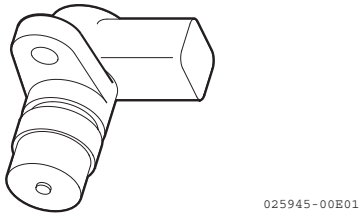

■ Inspecting the cam pulse sensor

Inspect the cam pulse sensor by measuring the resistance between its terminals.
[Note] No gap adjustment is required for the cam pulse sensor.

Measuring points	Measured value
Between terminals	515±35 Ω

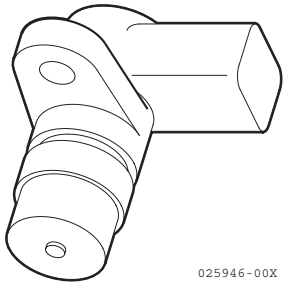

■ Inspecting the spark plugs

Check the electrode of each ignition plug for any damage, stains, and wear.
If the electrode is stained, clean the electrode and check and adjust the spark gap.
If the electrode is damaged or worn, replace it with new one.

Measuring points	Measured value		
	3GPH88	3GPJ88	4GPH88
Plug tightening torque	24 to 34 N·m		
Spark gap	0.35 to 0.45 mm		

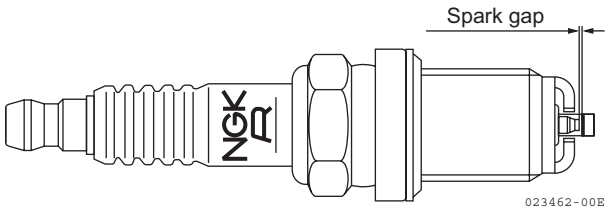

1.6 Inspecting the Regulator

While blowing in air through the gas inlet, check the hole open to the atmosphere for any leaks. (Submerge the regulator in water and check for any leaks based on whether air bubbles are seen.)

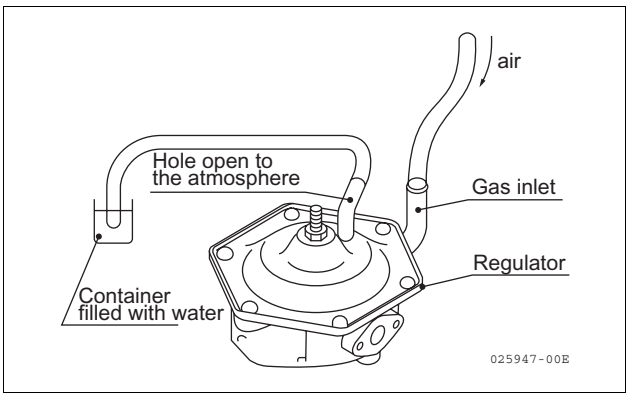

1.7 Inspecting the Valve Clearance

1. With the bonnet cover removed, set the cylinder being tested to the top of the compression stroke.
2. Measure the valve clearance using a thickness gauge.

Measuring points	Set value
Standard valve clearance	0.25 to 0.35 mm

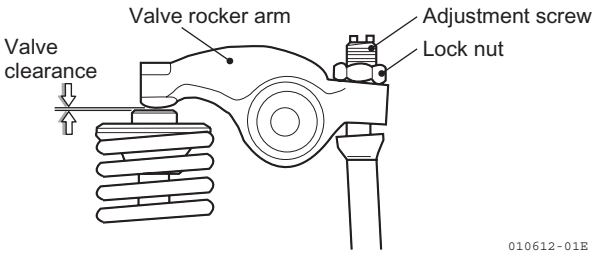

1.8 Inspecting the Compression Pressure

1. Disconnect all cylinders' ignition coil primary side wiring terminals.
2. Remove the spark plug from the cylinder being tested, and then attach a compression gauge.
3. Measure the pressure while the system is running in manual/auto operation mode. (The throttle opening degree should be the startup opening degree [120 pulses].)

∗ When you want to operate the starter using the checker during measurement, set the throttle to the full opening degree with the checker and unplug the mixer connector before performing measurement.
After you have finished measurement, re-plug the connector and set the throttle to the fully closed opening degree using the checker.
Forgetting to set the throttle to the fully closed opening degree could be very dangerous because the engine will rev up to a high speed the next time the system is started.

Warning Be sure to remove the cables from the ignition coil pre-event side before measurement; otherwise the engine could run during measurement, posing a danger.

Engine type	Standard value (MPa)	Variation (±)	Full limit (MPa)
3GPH88	1.1	0.2	0.59
4GPH88	1.1	0.2	0.59

If the flywheel does not rotate smoothly when turned by hand, chances are that the engine is seized or locked.

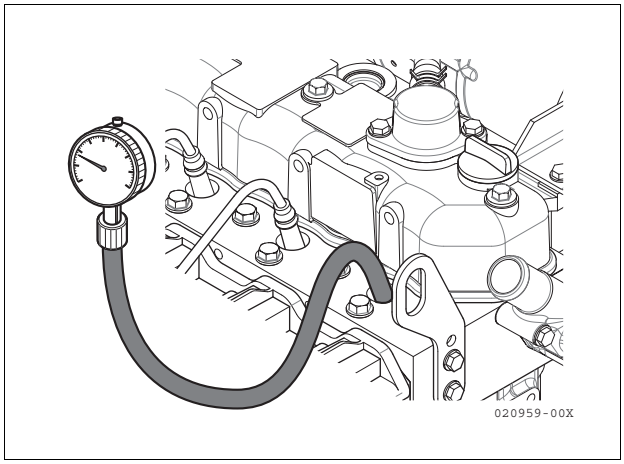

1.9 Inspecting the Belt

Visually inspect the compressor drive belt, generator belt, engine pulley, compressor pulley, and generator pulley.

- Check for any cracks or abnormal wear.
- Check the pulley surfaces and belt for oil stains.
- Check if the belt tension is correct. (See Part **7 Maintenance / Service Data**.)
- Check the pulley surfaces for scratches and foreign matter.

1.10 Inspecting the Air Cleaner

Remove the air cleaner cover, and pull out the element.
Check the cleaner interior and the element for any dirt or dust.

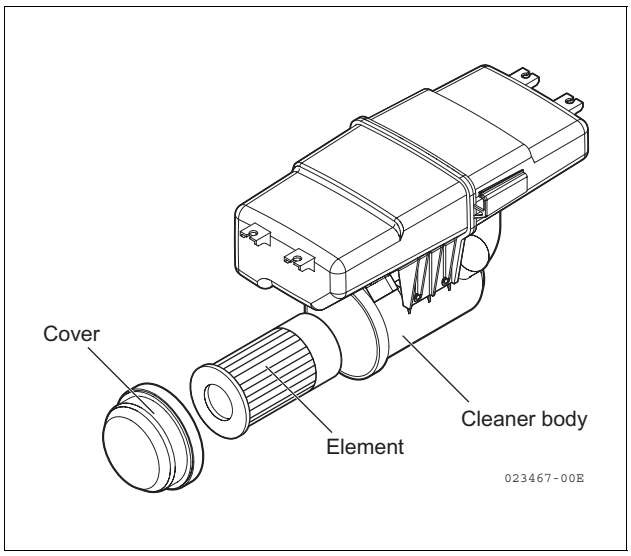

1.11 Inspecting the Breather Hose

Remove the breather hose from the engine bonnet, and check if there is any sludge remaining in the hose.
Any remaining sludge should be immediately removed.

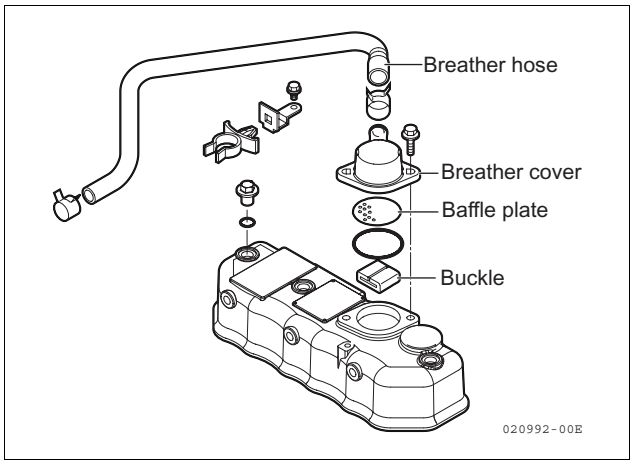

1.12 Inspecting the Engine Oil Level

If it seems that the engine consumes lubricating oil at too high a rate, determine whether the lubricating oil consumption is normal or abnormal based on the criteria given in the table below. If the lubricating oil consumption is abnormally high, chances are that there is a faulty valve train part (such as a stem seal) or a faulty piston ring. After repair, refill lubricating oil to the standard level.

		GYEQ20AN	GYEQ30AN
Factory oil level ("A" in the figure below)	(ℓ)	44	58
Factory oil level ("B" in the figure below)	(ℓ)	—	—
Oil level lower limit ("D" in the figure below)	(ℓ)	11	13
Refill or change level ("C" in the figure below)	(ℓ)	12	16
Maximum lubricating oil consumption	(cc/h)	3.2	4.2
"E" dimension in the figure below (between C and D in the figure below)	(mm)	5	10

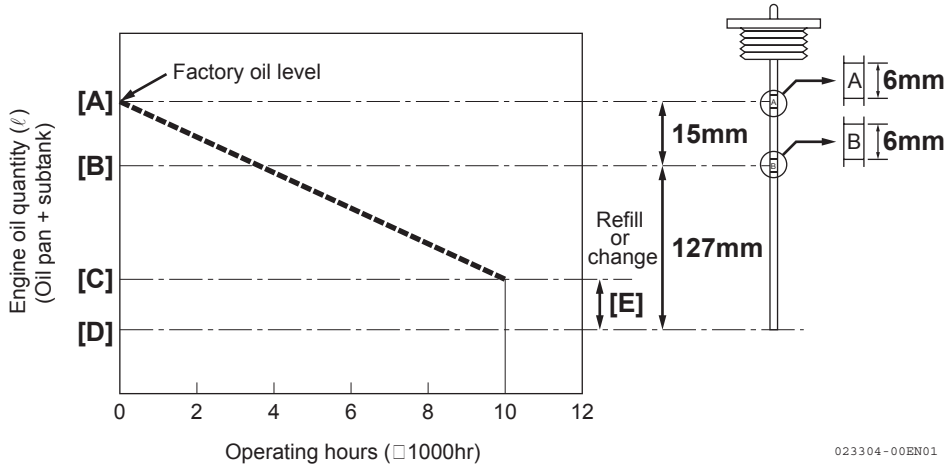

1.13 Inspecting Refrigerating Machine Oil and Refrigerant

■ **Inspecting the oil separator**

1. Make preparations so that you can measure the gas pressures at the high-side pressure servicing port and stop valve using a manifold gauge.
2. Make sure that the stop valve is open.
3. If the pressure at the high-side pressure servicing port (not at the stop valve) rises rapidly after the system starts up in heating mode, chances are that the oil separator is clogged. Replace the oil separator.

■ **Inspecting the oil return pipe**

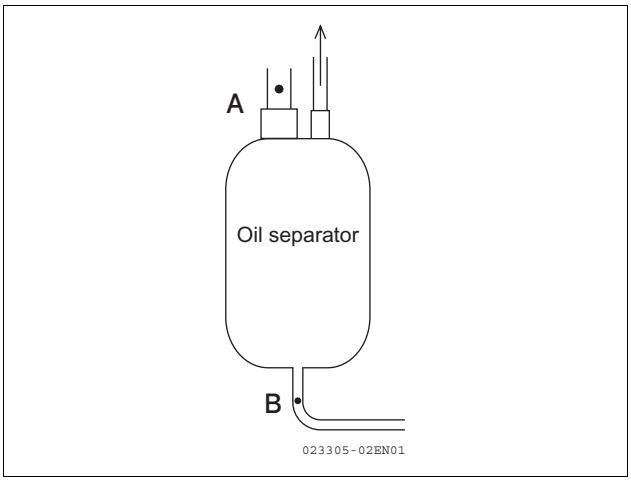

- If, in the state shown in the figure above with the temperature at point A equal to or higher than 60°C, the temperature at point B falls to or below 50°C during operation, chances are that the pipe is clogged at (or downstream of) point B or the solenoid valve is faulty.

1.14 Inspecting the Cooling Water Filter

Pinch the rubber hose connected to the cooling water filter, and remove the filter.
Check the mesh in the filter for dirt. If there is any dirt, remove it immediately.

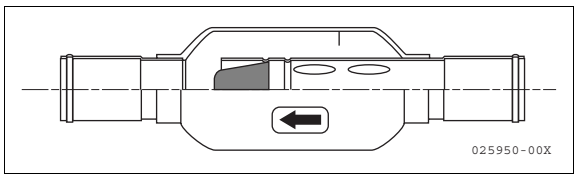

1.15 Checking the Cooling Water System for Water Leaks

■ **Inspecting the radiator cap**

While pressurizing the radiator cap with a cap tester, read the graduation of the gauge.

Measuring points	Set value
Radiator cap standard value	0.0490 MPa

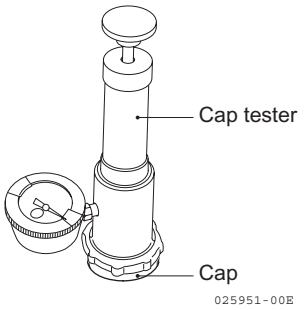

■ **Checking for water leaks**

While pressurizing the cooling water passage with a cap tester, read the graduation of the gauge.

Measuring points	Set value
Water leak inspection standard value	No drop in water pressure for 10 minutes at 0.13 MPa.

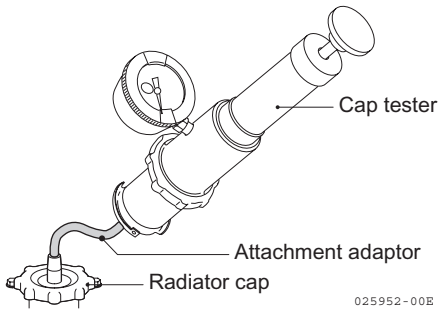

1.16 Inspecting the Cooling Water Level

Check the water level in the reservoir tank.
If the water level is below the LOW tick mark, chances are that the cooling water is leaking or was not refilled during the previous periodic inspection.
Check for any leaks, and refill cooling water.

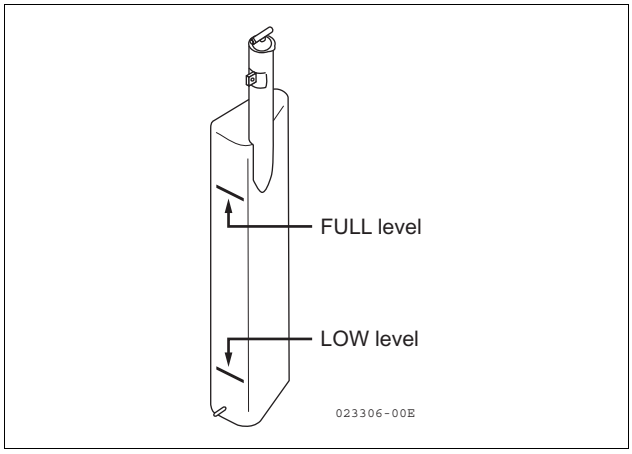

1.17 Inspecting the Water Motor-operated Valve

■ **Output voltage**

Parts to inspect	Measuring points	While system running (with actuator check CH21 ON)	During stop
Cooling water pump	DCBL circuit board Between the phases of CN206	200±10 V AC *	0 V

* Reference value

1. Using a tester, check if the output voltage requirements specified above are met.
2. If the voltage is significantly different than specified above, stop the system using the onboard checker and wait for 5 minutes; then, with the power OFF, check the harness for continuity and the junction connectors for contact failure using a tester.
3. If the harnesses and connectors are OK, then check each component.

■ **Inspecting the cooling water pump**

Inspect the cooling water pump by measuring the resistance between its terminals.

Measuring points	Measured value (Ω) *
Between terminals #1 (red) and #2 (white)	17.5±10%
Between terminals #1 (red) and #3 (black)	17.5±10%
Between terminals #2 (white) and #3 (black)	17.5±10%

* At 20°C (reference value)

■ Inspecting the water motor-operated valve

Inspect the water motor-operated valve by measuring the resistance between its connectors.

Measuring points	Measured value
Between terminals #2 (red) and #4 (pink)	70Ω
Between terminals #1 (amber) and #2 (red)	70Ω
Between terminals #2 (red) and #6 (yellow)	70Ω
Between terminals #2 (red) and #3 (blue)	70Ω

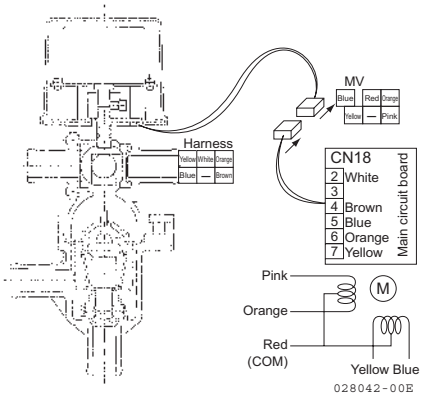

1.18 Inspecting the Thermostat

Put the thermostat in a container filled with water. While heating the water with an electric heater, measure the temperature and check when the valve begins opening and when it becomes fully open.

Thermostat	Begins opening	Fully open
60°C	60°C	75°C
71°C	71°C	85°C

∗ Because liquid packing is applied to the thermostat components before they are assembled, do not reuse the components after disassembly. Use new thermostat components.

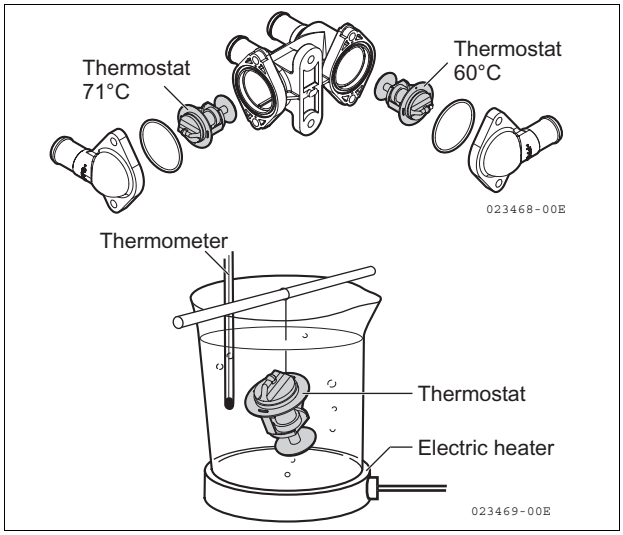

1.19 Inspecting the Cooling Water Concentration

Inspect the cooling water concentration using a coolant tester.
The concentration should be 50%.

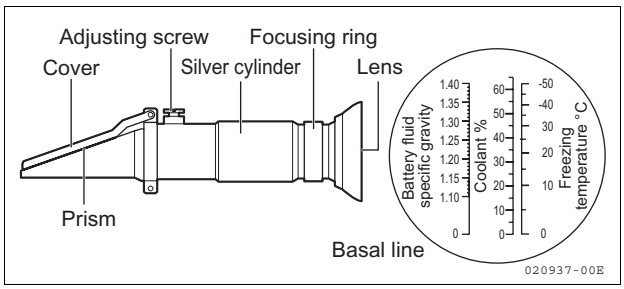

1.20 Inspecting the Oil Pressure Switch

Test the continuity between A and B terminals with a tester.

Status	Measured value
Stopped	Continuity exists
Running	No continuity

With the oil pressure switch removed, check the engine oil pressure using a Bourdon tube pressure gauge via a joint.

What to measure	Measured value
Engine oil pressure	0.343 to 0.392 MPa

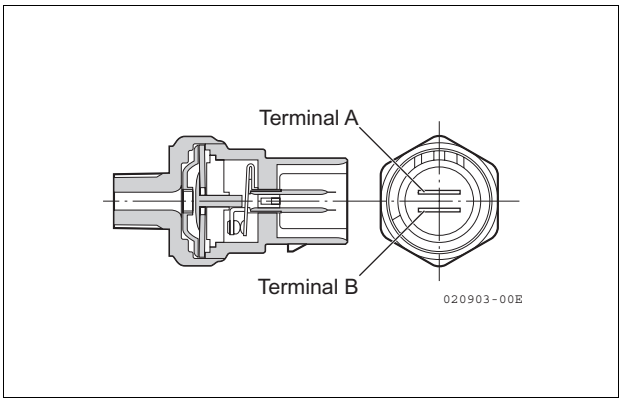

1.21 Inspecting the Cooling Water Temperature Sensor

Test the resistance between A and B terminals with a tester.
For the temperature/resistance characteristics, see **page 225 [Table7.3 List of resistance/ temperature characteristics of outdoor unit sensors]**.

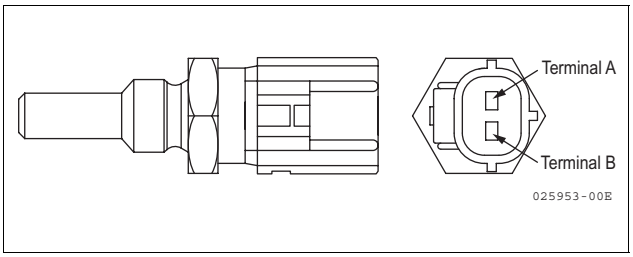

1.22 Inspecting the Exhaust Temperature Sensor

Test the continuity between connector terminals. If the reported temperature is normal, you only have to check whether or not continuity exists. If no continuity is detected but your inspection finds no problems with the exhaust temperature sensor itself, chances are that there is a contact failure. When a contact failure is suspected, check the exhaust temperature. If the exhaust temperature is OK, then open and visually inspect the catalyst mount.
For the temperature/resistance characteristics, see **page 225 [Table7.3 List of resistance/ temperature characteristics of outdoor unit sensors]**.

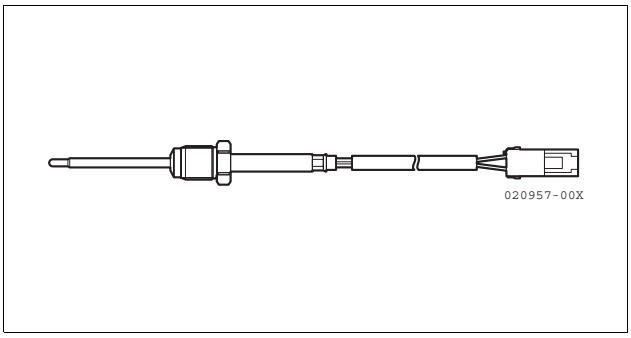

1.23 Inspecting the Compressor

■ **Checking for gas leaks**

1. Using a leak tester, check if refrigerant is leaking from the drain tube.
2. Visually check if a significant amount of refrigerating machine oil is leaking from the drain tube.
   (Allowable amount of refrigerating machine oil leaks)
   If the total operating time is between 0 and 1500 hours: 0.02 L (20 cc)/1500 hours
   If the total operating time is over 1500 hours: 0.014 L (14 cc)/1500 hours
3. Using a leak tester, check if refrigerant is leaking from the compressor intake and discharge flanges.
4. Check if the compressor clutch correctly turns ON/OFF using onboard checker channels 05 and 06.

■ **Checking for "compressor lock"**

1. With the compressor belt removed, make sure that the compressor rotates smoothly when turned by hand.
2. Check if the compressor clutch correctly turns ON/OFF using onboard checker channels 05 and 06.

■ **Inspecting the freezing cycle system after compressor replacement**

1. Compressor (C/P) malfunctions are typically caused by a fault in the compressor itself but also may be caused by a fault in the freezing cycle system.
2. After replacing the compressor, inspect the freezing cycle system by performing measurements at the following measuring points with the onboard checker (in outdoor unit data display mode) while the unit is running:

Fig. 5.1/ Freezing cycle check sheet (for reference)

Model			Service agent				Person in charge	
Checked date	Year /Month /Date		S/#		Operating time	Hr	Installed date	
Onboard checker values	CH01	min^{-1}	CH26	°C	CH46	°C	CH62	°C
	CH19	MPa	CH27	°C	CH47	°C	CH63	°C
	CH20	MPa	CH28	°C	CH48	°C	CH65	°C
	CH21	°C	CH29	°C	CH49	°C	CH66	°C
	CH23	°C	CH30	°C	CH50	°C	CH67	°C
	CH24	°C	CH44	°C	CH51	°C		
	CH25	°C	CH45	°C	CH61	°C		

Discharge	High-side pressure PH (Gauge value)	MPa	Discharge temperature (Measured value)	1	°C	Oil separator temperature at outlet (Measured value)	°C
				2	°C		
Intake	Low-side pressure PL (Gauge value)	MPa	Saturation temperature from low-side pressure value : (as per Table 6.4) TL =		°C	Intake 5 (TS5) temperature (Measured value) TK =	°C
Degree of heating: SH = TK - TL		°C				Judgment: 10°C or higher	OK/NG

Discharge temperature check (Fluid compression check): * The fluid is compressive if the discharge SH is 10°C or lower. Discharge SH = Discharge temperature - High-side pressure saturation temperature (converted value)	Discharge SH: °C	OK • NG

023307-00E01

1.24 Inspecting the Compressor Clutch

■ **Output voltage**

Parts to inspect	Measuring points	Actuator check		
		CH	ON	OFF
Compressor clutch 1	Between main circuit board's CN9-6 and ground (8)	05	12 V DC	0 V
Compressor clutch 2	Between main circuit board's CN9-7 and ground (8)	06	12 V DC	0 V

■ **Inspecting the compressor clutch**

Inspect the compressor clutch by measuring the resistance between its connectors and the ground.

Type	Measuring points	Measured value
SD type (for GYEQ20AN) 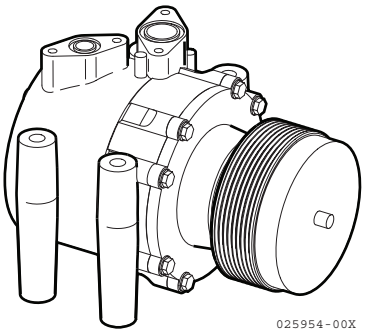	Between harnesses and ground	3.2 Ω
MHI type (for GYEQ20AN/GYEQ30AN) 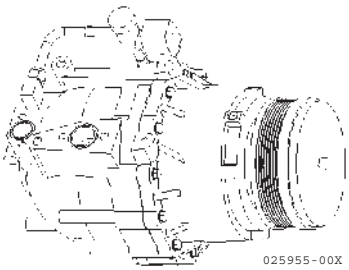 ∗ Whether solenoid valves are used depends on the model.	Between harnesses and ground	6.3 Ω

1.25 Inspecting the Solenoid Valves

1. While the unit is running, turn ON each solenoid valve either directly or via the actuator check function, and check the output voltage and operating noise at the output connector (shown in the figure above) of the circuit board.
2. If the output voltage is significantly different, check the continuity between the solenoid coil and circuit board harness as well as the coil resistance with the power OFF.
3. While the unit is running, turn OFF each solenoid valve, and check if there is a temperature difference between the upstream and downstream of the solenoid valve. If there is no temperature difference, chances are that the solenoid valve has been opened by foreign matter caught in it.
4. While the unit is running, check if the refrigerant flowing noise changes as expected when each solenoid valve turns from ON to OFF.

■ Output voltage

Parts to inspect	Measuring points	With actuator check ON or solenoid valve ON while running
Solenoid valve 31	Between power supply circuit board's CN112-1 and -3	Actuator CH35 200 V
Solenoid valve 1	Between power supply circuit board's CN113-1 and -3	Actuator CH13 200 V
Solenoid valve 2	Between power supply circuit board's CN114-1 and -3	Actuator CH14 200 V
Solenoid valve 37		Actuator CH41 200 V
Solenoid valve 3	Between power supply circuit board's CN115-1 and -3	Actuator CH15 200 V
Solenoid valve 12	Between power supply circuit board's CN116-1 and -3	Actuator CH69 200 V
Solenoid valve 3E ∗		Actuator CH76 200 V
Solenoid valve 6	Between power supply circuit board's CN124-1 and -3	Actuator CH61 200 V
Solenoid valve 9	Between power supply circuit board's CN125-1 and -3	Actuator CH64 200 V
Solenoid valve 10 ∗	Between power supply circuit board's CN126-1 and -3	Actuator CH65 200 V
Solenoid valve 4	Between power supply circuit board's CN127-1 and -3	Actuator CH16 200 V
Solenoid valve 7	Between power supply circuit board's CN128-1 and -3	Actuator CH62 200 V
Solenoid valve 8	Between power supply circuit board's CN129-1 and -3	Actuator CH63 200 V
Solenoid valve 3F ∗		Actuator CH77 200 V
Solenoid valve 12	Between sub circuit board's CN303-1 and -3	Actuator CH43 200 V
Solenoid valve 13	Between sub circuit board's CN304-1 and -3	Actuator CH71 200 V
Solenoid valve 32	Between sub circuit board's CN305-1 and -3	Actuator CH36 200 V
Solenoid valve 3A	Between sub circuit board's CN306-1 and -3	Actuator CH72 200 V
Solenoid valve 3B	Between sub circuit board's CN307-1 and -3	Actuator CH73 200 V
Solenoid valve 3C	Between sub circuit board's CN308-1 and -3	Actuator CH74 200 V
Solenoid valve 3D	Between sub circuit board's CN309-1 and -3	Actuator CH75 200 V
Solenoid valve 3G	Between sub circuit board's CN310-1 and -3	Actuator CH78 200 V
Solenoid valve 3H	Between sub circuit board's CN311-1 and -3	Actuator CH79 200 V

■ Inspecting the solenoid valves

Inspect each solenoid valve coil by measuring the resistance between its connectors.

Measuring points	Measured value
Between solenoid valve terminals	0.95 kΩ

The measured value is 1.2 kΩ for items marked with ∗.

1.26 Inspecting the Outdoor Fan Motor

Caution When you inspect the outdoor fan motor with the outdoor unit powered ON, take extreme care not to directly touch the circuit board (except the switches) or you may get an electrical shock. Even with the power OFF, there is a risk of an electric shock when any circuit board has an LED still lit. Before accessing any circuit board, make sure that there is no circuit board whose LED(s) are still lit.

■ Output voltage

Parts to inspect	Measuring points	During system stop	With actuator check ON	
Power supply circuit board	Between CN104-1 and -3	280 V DC ∗	280 V DC ∗	
DCBL circuit board	Between CN201-1 and -3	280 V DC ∗	280 V DC ∗	
	CN203 CN204 CN205 Between phases	0 V ∗	Speed (min^{-1})	Voltage
			700	180±5 V AC ∗
			600	180±5 V AC ∗
			500	180±5 V AC ∗

∗ Reference value

1. Using a tester, check if the output voltage requirements specified above are met.
2. If the voltage is significantly different than specified above, stop the system using the onboard checker and wait for 5 minutes; then, with the power shut OFF, check the harness for continuity and the junction connectors for contact failure using a tester.
3. If the harness and connectors are OK, then check each component.

■ Inspecting the fan motor

Inspect the fan motor by measuring the resistance between its terminals.

Measuring points		Measured value (Ω) ∗
Power supply	Between terminals #1(red) and #2 (white)	7.3±10%
	Between terminals #1(red) and #3 (black)	7.3±10%
	Between terminals #2(white) and #3 (black)	7.3±10%
Measuring points		Measured value (kΩ) ∗
Signal	Between #1 (pink) and #2 (gray)	100±10%
	Between #1 (pink) and #3 (yellow)	10±10%
	Between #1 (pink) and #4 (blue)	10±10%
	Between #1 (pink) and #5 (amber)	10±10%
	Between #2 (gray) and #3 (yellow)	100±10%
	Between #2 (gray) and #4 (blue)	100±10%
	Between #2 (gray) and #5 (amber)	100±10%
	Between #3 (yellow) and #4 (blue)	20±10%
	Between #3 (yellow) and #5 (amber)	20±10%
	Between #4 (blue) and #5 (amber)	20±10%

∗ At 20°C (reference value)

1.27 Inspecting the Refrigerant Amount

■ Checking whether refrigerant is undercharged or overcharged

Determine whether refrigerant is undercharged or overcharged based on the criteria given in the following table:

Measuring points	Run mode	Measured value
Undercharged	Cooling	In a steady state during operation, the number of pulses from EV4 is higher than 70, and the temperature measured on the copper pipe surface, [T1]-[T2], is lower than 2°C.
	Heating	In a steady state with all indoor units running, the number of pulses from EV1 is equal to or higher than 480.
Overcharged	Cooling	Refrigerant pressure is excessively high. (Beyond the standard pressure range specified below.)
	Heating	Heating does not work even though the high-side pressure is high and the engine speed stays low.

Standard pressure range

Run mode	Cooling	Heating
High-side pressure	2.0 to 3.4 MPa	2.4 to 3.6 MPa
Low-side pressure	0.6 to 1.1 MPa	0.2 to 1.1 MPa
Outdoor air temperature	21 to 35°C	-10 to 21°C

■ Checking for refrigerant leaks

1. Pressurize the refrigerant system to 4.0 MPa by charging N2 gas from the high/low pressure side servicing port, and check for any leaks using a soap solution.
2. After inspection, completely wipe off the soap solution to prevent rust.
3. Check the drain level in the compressor drain part.

[Checklist for early detection of refrigerant leak spots]

- Check for any spots where refrigerating machine oil is leaking.
- Check if a significant amount of refrigerating machine oil is collected in the compressor oil reservoir.
- Check the stop valve and servicing port operating portion for any problems.
- Check the fusible plug of the receiver tank for any problems.
- Check the compressor flange tightening portions for any problems.

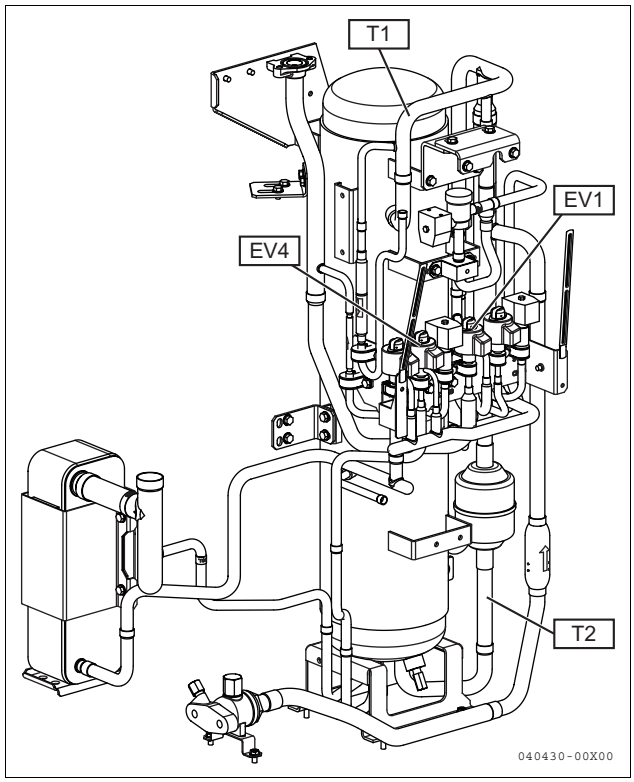

∗ This model is slightly different from other models, but there is no significant difference regarding the measuring points.

1.28 Inspecting the Check Valve

1. While the unit is running, check if a temperature difference exists between points A and B in the pipe when the pipe internal pressure is lower at point A than at point B. If there is no temperature difference, chances are that refrigerant is leaking.
2. When a slight amount of refrigerant is leaking, frost may be observed upstream and downstream of the check valve.

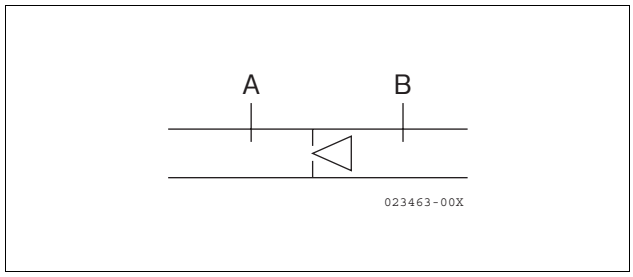

1.29 Inspecting the Electronic Expansion Valve

Inspect the electronic expansion valve by measuring the resistance of its coil.

Measuring points	Measured value
Between terminals #1 (red) and #4 (white)	46 Ω
Between terminals #1 (red) and #6 (amber)	46 Ω
Between terminals #1 (red) and #5 (yellow)	46 Ω
Between terminals #1 (red) and #7 (blue)	46 Ω

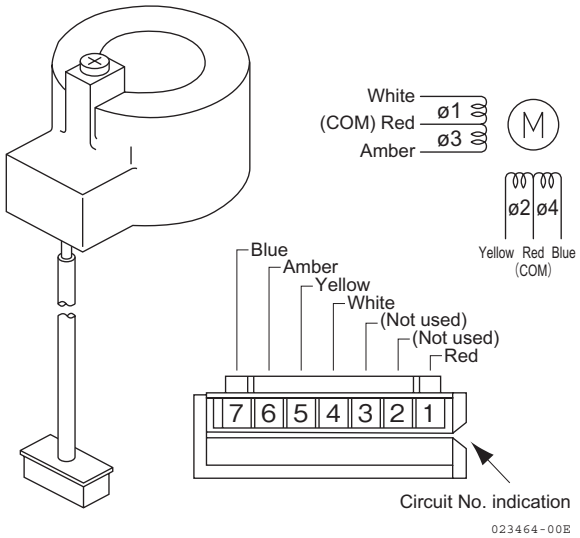

1.30 Checking Stop Valve Operation

Check if the stop valve turns in the correct direction when opened/closed.

There is a stop valve inside the outdoor unit.

GYEQ20AN

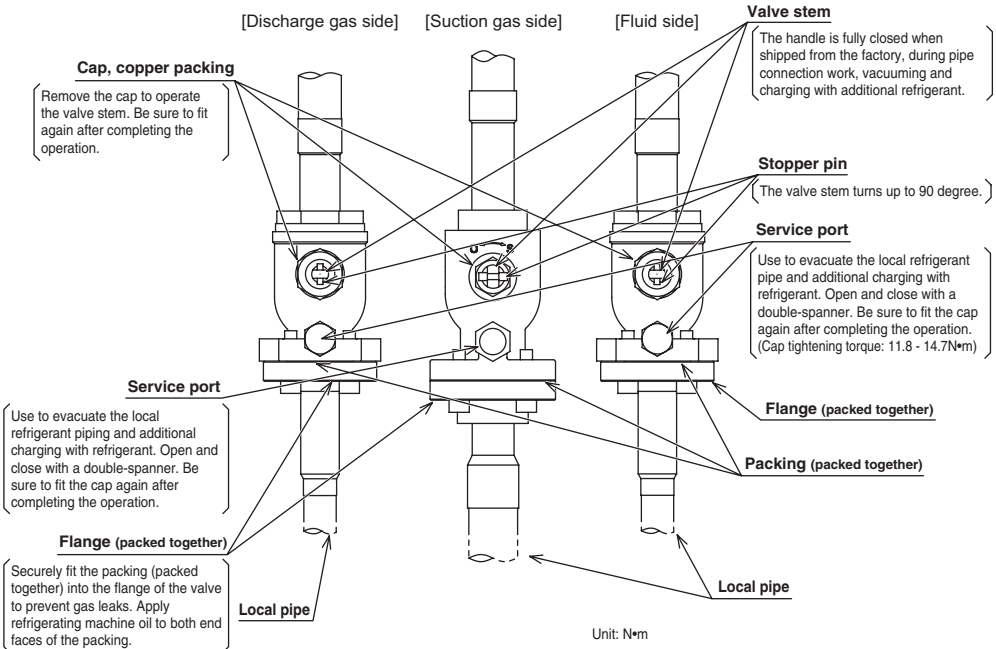

Unit: N•m

Flare nut tightening torque	
M6 hexagon socket head cap screw	11±1

GYEQ30AN

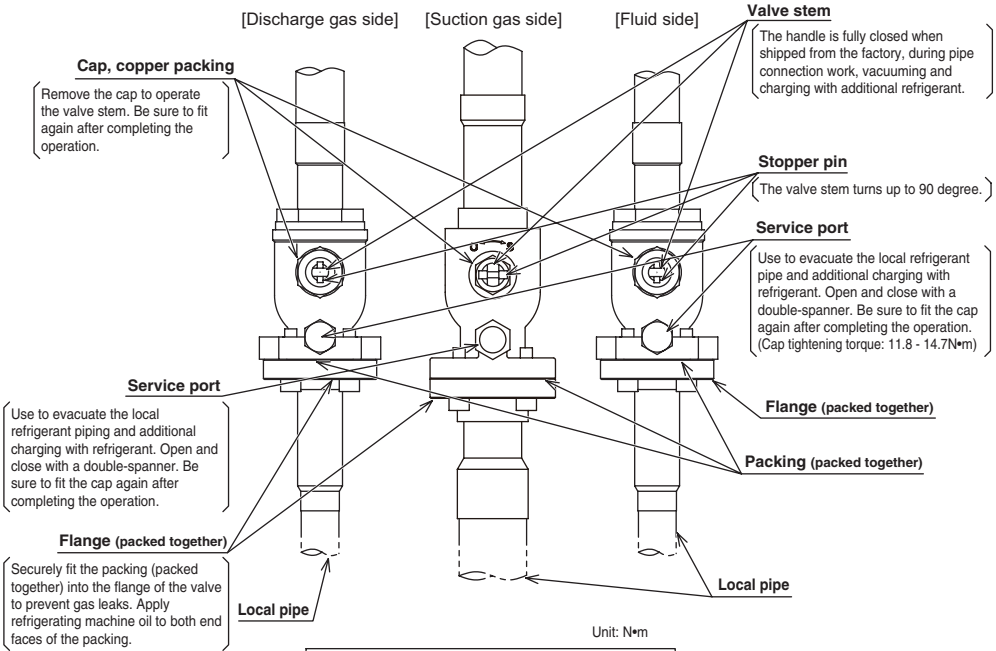

Unit: N•m

Flare nut tightening torque	
M6 hexagon socket head cap screw	11±1

1.31 Inspecting the Four-way Valve

■ **Output voltage**

Parts to inspect	Measuring points	With actuator check ON
Four-way valve (normal heating)	Between power supply circuit board's CN112-1 and -3	CH12 200 V AC

1. Using a tester, check if the output voltage requirements specified above are met.
2. If the voltage is significantly different than specified above, stop the system using the onboard checker and wait for 5 minutes; then, with the power OFF, check the harness for continuity and the junction connector for contact failure using a tester.
3. If the harnesses and connectors are OK, then check each component.

■ **Inspecting the four-way valve coil**

Inspect the four-way valve coil by measuring the resistance between its connectors.

Measuring points	Measured value
Between connectors	1.2 kΩ

1.32 Inspecting the SC Coil

While the system is running, inspect the SC coil contained in the receiver as follows:

1. Check if the number of pulses from EV4 is 5.
   (Use the onboard checker's channel 10.)
2. Calculate SH using the formula:
   SHS4 = intake air temperature 4 (CH28) - temperature equivalent temperature (CH55)
3. If SHS4 is approximately 0 with EV4 transmitting 5 pulses, chances are that EV4 or the SC coil is broken.
4. Measure the temperature at points T1, T2, and T3 indicated in the figure at right.
   If T1 is approximately equal to T2 and T3 is smaller than T2 minus 5 with EV4 transmitting 5 pulses, chances are that the SC coil is broken.
   If T2 is smaller than T1 minus 5 with EV4 transmitting 5 pulses, chances are that EV4 is broken.

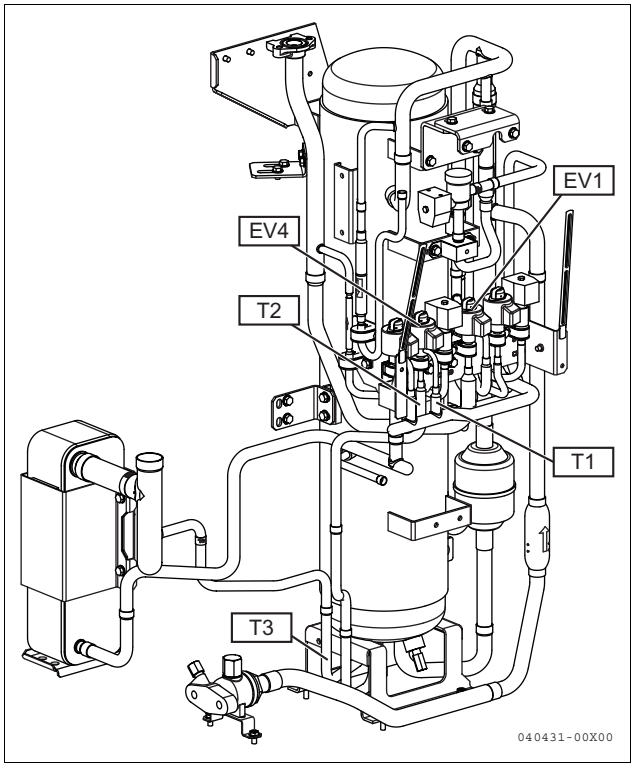

∗ This model is slightly different from other models, but there is no significant difference regarding the measuring points.

1.33 Inspecting the Refrigerant System Sensors

■ **Inspecting the high pressure switch**

Check the continuity between terminals. There should be continuity while stopped.

Working pressure characteristics (factory default settings)		
Type	Circuit open	Circuit closed
HPS1/2	$4.0^{+0}_{-0.15}$ MPa	3.15±0.15 MPa

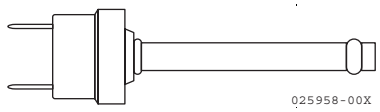

■ **Inspecting the pressure sensors**

For each of the high and low refrigerant pressures, get the sensor value and actually measured value by checking the refrigerant pressure with the outdoor unit's onboard checker and measuring the refrigerant pressure with a manifold gauge. If the two values are approximately equal, it means that the refrigerant pressure is normal.

[High pressure sensor]

High pressure sensor	Pressure range
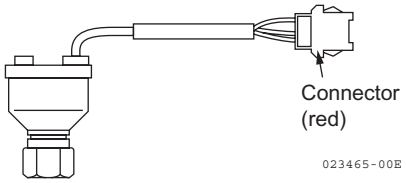	0 to 4.15 MPa

You can convert the output voltage of the high pressure sensor into the equivalent pressure using the table on **page 226**. The input voltage is 5 V (constant) when measured between the main circuit board's CN4-2 (black) and -3 (red).

[Low pressure sensor]

Low pressure sensor	Pressure range
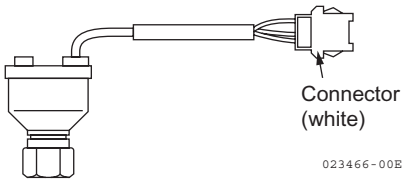	0 to 3.33 MPa

You can convert the output voltage of the low pressure sensor into the equivalent pressure using the table on **page 226**. The input voltage is 5 V (constant) when measured between the main circuit board's CN4-5 (black) and -6 (red).

■ **Inspecting the discharge temperature sensor**

Measure the resistance between terminals. If the actually measured value is approximately equal to the checker value, it means that the sensor is normal.

■ **Inspecting the intake air temperature sensor**

Measure the resistance between terminals. If the actually measured value is approximately equal to the checker value, it means that the sensor is normal.

■ **Inspecting the outdoor air temperature sensor**

Measure the resistance between terminals. If the actually measured value is approximately equal to the checker value, it means that the sensor is normal.

■ **Inspecting the oil temperature sensor**

Measure the resistance between terminals. If the actually measured value is approximately equal to the checker value, it means that the sensor is normal.

■ **Receiver temperature sensor**

Measure the resistance between terminals. If the actually measured value is approximately equal to the checker value, it means that the sensor is normal.

For the resistance/temperature characteristics of various sensors, see **page 225 [Table7.3 List of resistance/temperature characteristics of outdoor unit sensors]**.

1.34 Inspecting the Outdoor Unit's Circuit Boards and Power Supply System

1. With the power breaker OFF, check for any burned or broken circuit boards.
2. Check each circuit board for any broken fuses.
3. If all circuit boards are OK, turn ON the power breaker and check the output voltage.

■ Fuses on circuit boards

Part		Purpose	Capacity
Power supply circuit board	F1	Power supply R-phase	250 V 15 A
	F2	Power supply S-phase	250 V 15 A
	F3	Power supply T-phase	250 V 15 A
	F4	Ignition power supply	250 V 15 A
	F5	200 V-based load	250 V5 A
	F101	Main circuit board power supply	250 V 4 A
Main circuit board	F1	Communications with indoor units	250 V 0.5 A
	F2	Clutch	125 V 10 A
Sub circuit board	FU1	200 V-based load	250 V 1 A

■ Output voltage

Parts to inspect		Measuring points	Measured value
Main circuit board power supply	Power supply circuit board	Between CN106-1 and -3	16 V DC
		Between CN106-2 and -3	12 V DC
		Between CN106-4 and -5	5 V DC
		Between CN106-6 and -7	5 V DC
Ignition power supply	Power supply circuit board	Between CN107-1 and -2	14 V DC
Sub circuit board power supply	Power supply circuit board	Between CN106-1 and -3	16 V DC
		Between CN106-2 and -3	12 V DC
		Between CN106-4 and -5	5 V DC
		Between CN110-1 and -2	200 V AC

1.35 Inspecting the Communication Cables

Check the connection and continuity of each communication cable.

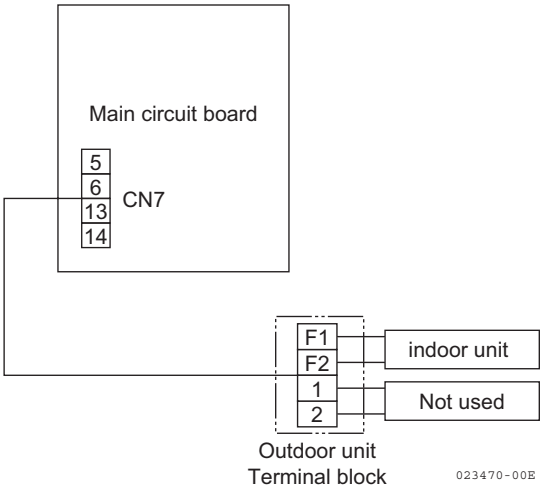

1.36 Inspecting the Heaters

■ Inspecting the oil separator heater

Measure the resistance between terminals.

Measuring points	Measured value
Between terminals	570 Ω ±7%

■ Inspecting the accumulator heater

Measure the resistance between terminals.

Measuring points	Measured value
Between terminals	890 Ω ±10%

■ Inspecting the oil return heater

Measure the resistance between terminals.

Measuring points	Measured value
Between terminals	5000 Ω ±7%

Part 6
Replacement of Parts

1. Precautions to Take before Replacement 203
   1.1 Safety Precautions 203
   1.2 Safety Precautions for Replacement 203
2. Replacement of Primary Parts 204
   2.1 Replacing the Engine 204
   2.2 Replacing the Compressor 206
   2.3 Replacing the Compressor Heater 209
   2.4 Charging the Refrigerating Machine Oil 209
   2.5 Charging the Refrigerant 210
   2.6 Removing the Control Box 210

1. Precautions to Take before Replacement

1.1 Safety Precautions

Warning

- Turn off the power to the outdoor unit.
  Otherwise you may get an electric shock or be caught or jammed in rotating parts when the unit is inadvertently operated from a remote control unit.
- After turning off the power to the outdoor unit, make sure that none of the LEDs on the outdoor unit's circuit boards are lit.
  Even though the main power has been turned OFF, attempting to access the circuit boards with any LED lit could result in an electrical shock due to electricity remaining in the circuit.
- Close the fuel gas cock.
  Otherwise a gas leak may occur when you replace the engine or fuel system parts.
- The cooling water remains hot for some time after the engine is stopped. Do not attempt to open the radiator cap until the cooling water temperature is low enough.
  Otherwise the cooling water may spout out, possibly resulting in a burn.

Warning

- Make sure that fire extinguishing equipment is readily available before performing soldering or some other task that uses fire.
  Take extreme care to prevent oil and any other flammable materials from catching fire.
  Take extreme care not to inhale gas or smoke generated when the refrigerant is combusted.

Caution

- Take care not to drop a heavy unit or assembly such as the engine or compressor during replacement.
  Also, take care not to pinch your fingers or hands.
- The outdoor unit has various fluids that remain hot for some time after it stops operation, such as the cooling water and engine oil. Take care when draining such fluids.
- Take care not to touch parts that remain hot for some time after the unit is stopped.

1.2 Safety Precautions for Replacement

- Be sure to have the refrigerant recovered by a recycle company registered with the local government, not only when replacing refrigerant system parts, but also when just servicing the refrigerant system.
  Also, have the refrigerant charged by a high pressure gas vendor.
- When recovering the refrigerant, turn OFF the outdoor unit’s power supply only and do not turn OFF the indoor unit’s power supply.
  When turning OFF the indoor unit’s power supply, be sure to follow the procedure on **page 210 [2.5 Charging the Refrigerant]** for charging refrigerant.
- After replacing a part, any parts (such as harnesses/cables and hoses) that were connected with the old part must be connected to the new part by exactly restoring the original path, clamping method, position, and so on. They must not contact edges or vibrating areas. Also, take care not to misconnect connectors. To ensure that the original conditions can be exactly restored, take photographs or sketches or apply markings as appropriate before replacement.
- Connect connectors while checking the electrical connection diagram.
  Note that connectors are identified by shape and color. The connectors with the same shape and color are identified by labels (color and number) on the harness side. Also, the major connectors on the PCB are described with the actuator name (number) to be connected, so refer to the shape, color, label and indication on the PCB and take care not to misconnect connectors.
- Take care not to spill engine oil, cooling water, and so on.
- After replacing refrigerant system parts, perform an air tightness test and evacuation of the refrigerant system.
- Make sure that the wiring terminals do not touch the circuit board or body, and cover the removed terminals, for example by using insulation tape.
- Make sure that the types and sizes (length in particular) of the bolts and nuts are correct.
- After completing inspection or repair, be sure to perform sufficient actuator checks and test runs to ensure that operation is normal.

2. Replacement of Primary Parts

2.1 Replacing the Engine

Fig. 6.1/ Engine structure diagram

■ **3GPH88**

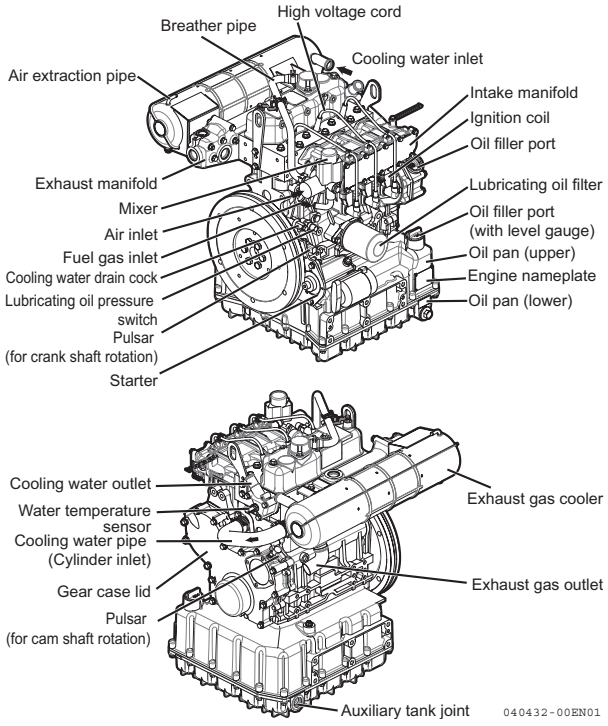

■ **4GPH88**

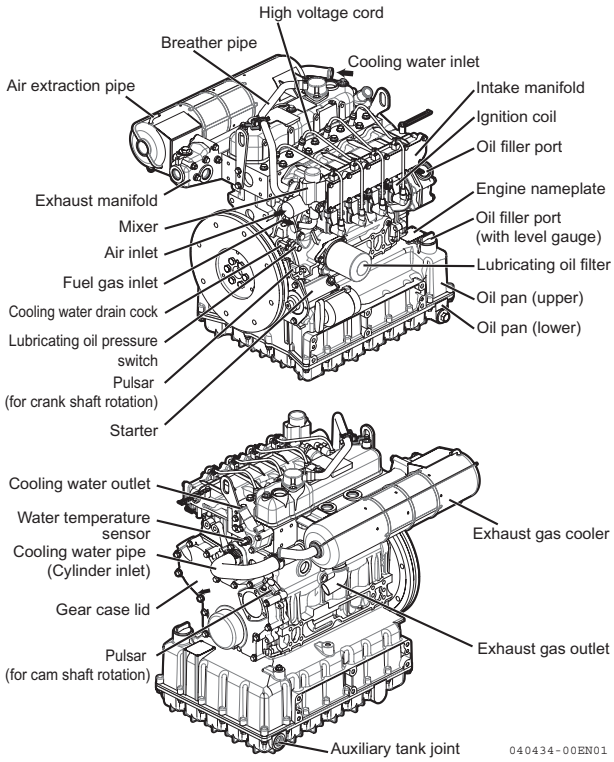

Fig. 6.2/ Engine periphery structure diagram

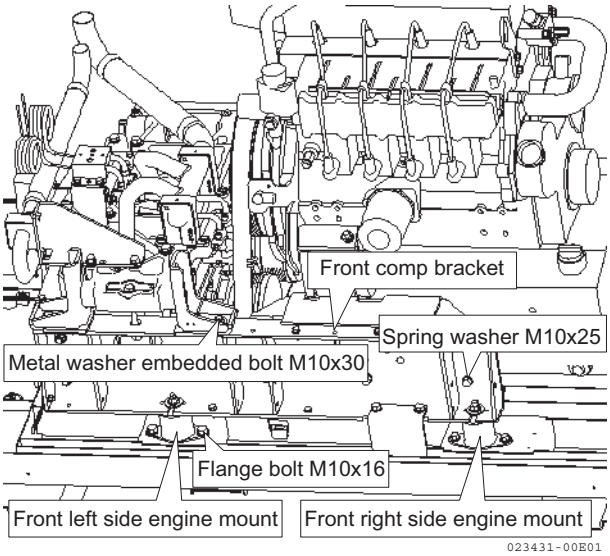

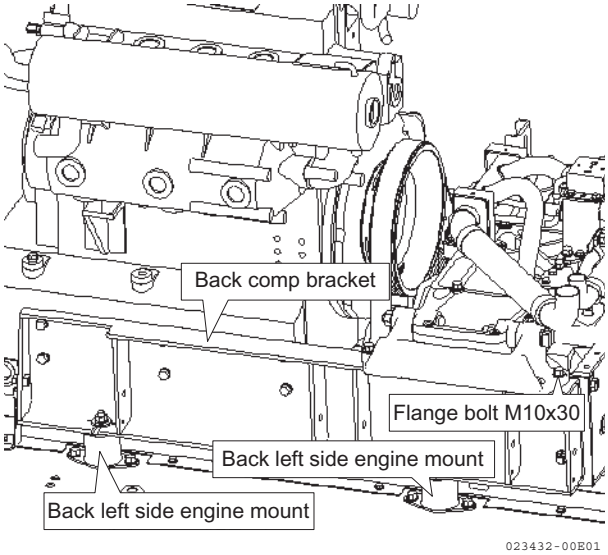

∗ In the figures, the use and shape of the compressor and related parts differ depending on the model, but there is no significant difference in the structures and part names.

Caution Check **page 203 [1. Precautions to Take before Replacement]** before proceeding with the following steps.

1. Drain the engine oil.
   Use the engine's oil pan filler port to drain the engine oil.
2. Drain the cooling water.
   Use the drain cock or drain plug located on the engine block, exhaust gas cooler, or deodorizing catalyst (if equipped) to drain the cooling water.
   If the cooling water temperature is high, cool down the cooling water using the cooling water cool-down mode of the actuator check function.
3. Remove the strut located at the center of the front side.
4. Place wooden bases underneath the engine.
   (Use 2 to 4 wooden bases sized approximately 45 × 700 mm along with 5 to 10 mm shims.)
   ∗ Fit the engine with the wooden bases from beneath the front comp bracket to the back comp bracket, and fill the gap toward the engine oil pan with thin shims.
5. Set another wooden base on the left edge of the front comp bracket.
   (Use one wooden base sized approximately 45 × 100 mm.)

6. Remove the engine mount on the front left side.
7. Remove the V ribbed belt. (See **page 213 [1.2 Periodic Inspection Procedure for the Outdoor Unit]**.)
8. Place wooden bases underneath the compressor.
   (Use two wooden bases sized approximately 45 × 700 mm.)
   ∗ Fit the compressor with the wooden bases from beneath the front comp bracket to the back comp bracket.
9. Remove all the harnesses and hoses (cooling, intake, exhaust, fuel, and lubricating oil) that are connected to the engine.
10. Remove the air cleaner and drain filters.
11. ∗ Remove the front comp bracket and remove the bolts that anchor the back comp bracket to the engine.
12. Remove the engine mount on the front right side.
13. Pull out the engine.
    ∗ Take care to prevent the compressor from slipping down from the wooden bases when pulling it out. Once you have pulled out the compressor, take care not to drop it.

[Reverse the steps above to install the replacement]

∗ Make sure that the types and sizes (length in particular) of the bolts and nuts are correct.

2.2 Replacing the Compressor

Fig. 6.3/ Compressor periphery structure diagram

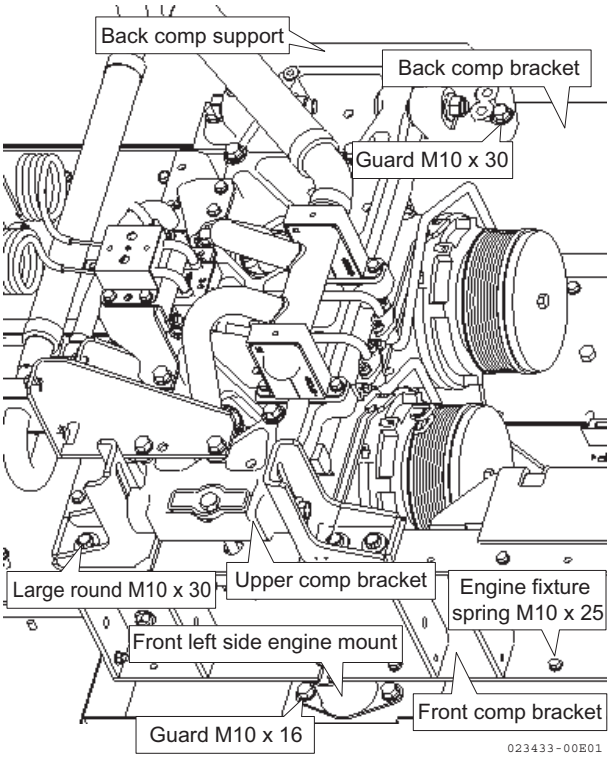

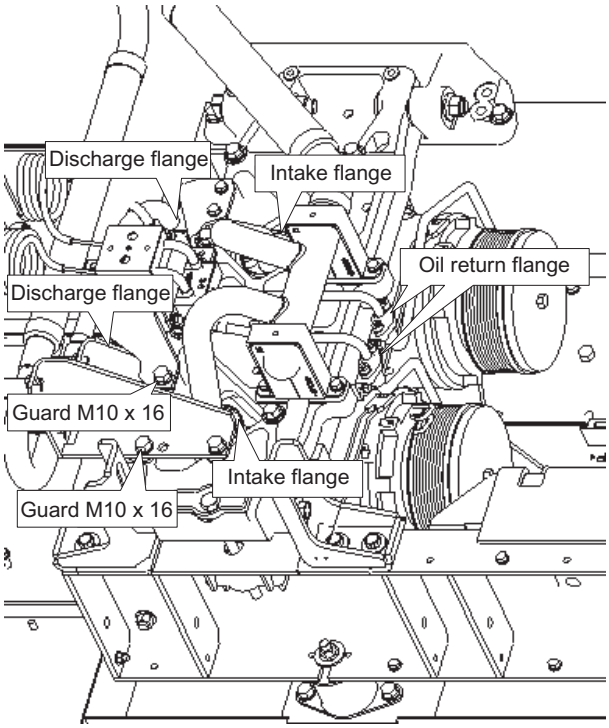

∗ In the figures, the use and shape of the compressor and related parts differ depending on the model, but there is no significant difference in the structures and part names.

Caution Check **page 203 [1. Precautions to Take before Replacement]** before proceeding with the following steps.

1. Before replacing the compressor
   (1) Turn OFF the outdoor unit's power supply only. Do not turn OFF the indoor unit's power supply. When turning OFF the indoor unit's power supply, be sure to follow the procedure on **page 210 [2.5 Charging the Refrigerant]** for charging refrigerant.
   (2) When replacing the refrigerating machine oil with the compressor lock or the like, remove the whole amount of refrigerating machine oil from the oil port (oil return line).
   (3) Recover the refrigerant.
2. Remove the strut located at the center of the front side.
3. Remove the air cleaner.
   ∗ Take care not to damage the harness when removing the bracket.
4. Place wooden bases underneath the engine.
   (Use 2 to 4 wooden bases sized approximately 45 × 700 mm along with 5 to 10 mm shims.)
   ∗ Fit the engine with the wooden bases from beneath the front comp bracket to the back comp bracket, and fill the gap toward the engine oil pan with thin shims.
5. Set another wooden base on the left edge of the front comp bracket.
   (Use one wooden base sized approximately 45 × 100 mm.)
6. Remove the engine mount on the front left and front right sides.
7. Remove the front comp bracket and left comp bracket. Remove the clamp of the harness for the starter cable and other cables.
8. Place wooden bases underneath the compressor.
   (Use two wooden bases sized approximately 45 × 700 mm.)
9. Remove the V ribbed belt. (See **page 213 [1.2 Periodic Inspection Procedure for the Outdoor Unit]**.)
10. Unplug the compressor heater, clutch and oil return solenoid valve connectors.
11. Remove the pipe clamp from the upper comp bracket.
12. Remove the discharge, intake, and oil return flanges.
    ∗ To remove the oil return flange, remove the upper comp bracket.
    ∗ Suspend the pipes in a higher position using a string or rope so that they will not interfere when you pull out the compressor. When suspending the pipes, take care not to excessively bend the oil return cabinet pipe.

13. Remove the bolts that anchor the back comp support to the back comp bracket.
14. Pull out the compressor along with the brackets.
    ∗ Take care not to pinch your hands when pulling out the compressor, and not to let the compressor slip down from the wooden bases. Once you have pulled out the compressor, take care not to drop it.
15. With the compressor placed on a stable surface, remove the oil return flange from the compressor and remove the compressor from the flanges.

[Reverse the steps above to install the replacement]

∗ When replacing the compressor with the compressor lock, replacement of the oil separator or other parts and pipe cleaning may be required. For more information, contact YANMAR.
∗ Make sure that the types and sizes (length in particular) of the bolts and nuts are correct.
∗ Make sure that the wiring is connected correctly. Take care not to misconnect the clutch in particular, and perform the actuator check after the completion of installation.
∗ When removing the compressor for replacement from the flange cover, remove from the intake side flange. Removing the oil return first could result in the oil spouting.
∗ The oil return cabinet pipe must be restored exactly to its original clamped conditions (number of clamp turns and position). If the original clamped conditions are not restored, the cabinet pipe may possibly break.
∗ After installing the compressor, be sure to turn the compressor ten times by hand before charging refrigerant.
∗ Before the first operation after replacing the compressor (including the refrigerant charging mode), be sure to perform the following procedure.

GYEQ20AN	After turning ON the memory switch CH9-5 and resetting the power supply, close the fuel gas cock, apply the cranking twice, turn OFF the memory switch CH9-5 and reset the power supply
GYEQ30AN	Close the fuel gas cock and apply the cranking four times

Type	Refrigerating machine oil initial charged amount	Weight
SD type (for GYEQ20AN) 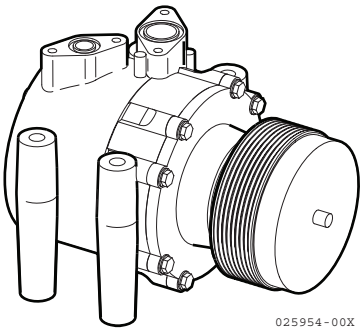	0 cc	Approx. 8 kg
MHI type (for GYEQ20/30AN) 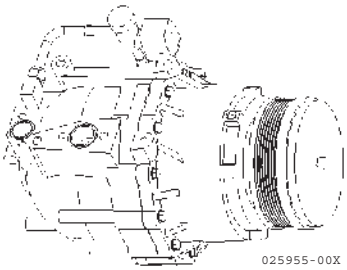 ∗ Whether solenoid valves are used depends on the model.	750 cc	Approx. 28 kg

Caution MIH compressor models may differ in internal structure even though they share the same external aspects such as the presence of a solenoid valve or the pulley size. Be sure to identify the applicable model by referring to the compressor identification plate, and take care to prevent compressor mismatch.
GYEQ20AN
GYEQ30AN

2.3 Replacing the Compressor Heater

Caution Check **page 203 [1 Precautions to Take before Replacement]** before proceeding with the following steps.

[C2 compressor heater (located on the front side)]

1. Remove the strut located at the center of the front side.
2. Perform steps 2 through 7 of "Replacing the compressor."
3. Remove the front comp bracket.
4. Remove the compressor heater.

[Reverse the steps above to install the replacement]

∗ Make sure that the types and sizes (length in particular) of the bolts and nuts are correct.

[C1 compressor heater (located on the back side)]

1. Remove the strut located at the center of the back side.
2. Remove the drain filter.
3. Place wooden bases underneath the engine.
   (Use 2 to 4 wooden bases sized approximately 45 × 700 mm along with 5 to 10 mm shims.)
   ∗ Fit the engine with the wooden bases from beneath the back comp bracket to the front comp bracket, and fill the gap toward the engine oil pan with thin shims.
4. Set another wooden base on the right edge of the back comp bracket.
5. Remove the engine mount on the back left side.
6. Place wooden bases underneath the compressor.
7. Remove the V ribbed belt. (See **page 213 [1.2 Periodic Inspection Procedure for the Outdoor Unit]**.)
8. Remove the back comp bracket.
9. Remove the compressor heater.

[Reverse the steps above to install the replacement]

∗ Make sure that the types and sizes (length in particular) of the bolts and nuts are correct.

2.4 Charging the Refrigerating Machine Oil

Caution Check **page 203 [1. Precautions to Take before Replacement]** before proceeding with the following steps.

[If you have replaced the compressor:]

When the amount of remaining refrigerating machine oil in the old compressor is larger than the initial charged amount (see **page 206 [2.2 Replacing the Compressor]**) of the replacement compressor, charge the difference from the oil port (oil return line) after replacing the compressor. When there is an oil leak, charge the leaked amount similarly.

[If you want to refill]

Charge the refill amount from the oil port (oil return line).

[If you have completely drained the refrigerating machine oil from the system:]

1. Perform evacuation through the high and low pressure side servicing ports or the stop valves (liquid and gas). (When performed through the stop valves, they must be opened) Turn ON the outdoor unit evacuation mode when performing evacuation.
2. For GYEQ30AN, charge the whole amount from the oil port (oil return line). For GYEQ20AN, charge half amounts from both the oil port (oil return line) and the low pressure side servicing port.

[Refrigerating machine oil charged amount at the time of outdoor unit shipment]

Outdoor unit capacity	GYEQ20AN	GYEQ30AN
Charged amount (L) ∗1	7.6	9.8

∗1. Described on the outdoor unit model identification plate.

2.5 Charging the Refrigerant

Caution Check **page 203 [1 Precautions to Take before Replacement]** before proceeding with the following steps.

- If the refrigerant is recovered when repairing the refrigerant system or in some other operation, recharge the refrigerant with the following procedure.

1. Open all of the stop valves and perform evacuation through the stop valves. Turn ON the outdoor unit evacuation mode when performing evacuation. Be sure to turn OFF the outdoor unit evacuation mode after the completion of evacuation.
   ∗ When charging refrigerant after replacing the compressor, cranking or a similar operation is required. (See **page 206 [2.2 Replacing the Compressor]**.)
2. Turn on the power supply for the indoor and outdoor units and confirm signal transmission for the indoor and outdoor units.
3. Charge 1 kg of refrigerant from the oil port.
4. Through the gas side stop valve, charge a total amount of refrigerant (initial charged amount + on-site charged amount - 1) in the ratio described in the table below, depending on the outdoor air temperature.

Outdoor air temperature	0°C or lower	0°C to 30°C	Higher than 30°C
Charged amount	2%	5%	10%

5. Through the liquid side stop valve, charge the remaining full amount.
   If you cannot completely charge the remaining amount, close the liquid side stop valve and charge refrigerant using the additional refrigerant charging mode.

2.6 Removing the Control Box

Caution Check **page 203 [1. Precautions to Take before Replacement]** before proceeding with the following steps.

1. Remove the strut on the front left side.
2. Remove the starter transformer, rectifier, and reactor.
3. Remove all harnesses connected to the connectors inside the control box.
   ∗ Since there are numerous connectors, take photographs or sketches or apply markings as appropriate to ensure that you can exactly restore the original connections.
4. Remove the bolts that fasten the upper and lower halves of the control box and the control box base. (The control box splits into upper and lower halves.)
5. Remove the bolts that fasten the control box to the intermediate plate.
6. Pull out the upper and lower halves of the control box.
   ∗ Take care not to damage the circuit boards and other parts.

[Reverse the steps above to install the replacement]

∗ Make sure that the types and sizes (length in particular) of the bolts and nuts are correct.

∗ Connect connectors while confirming the electrical connection diagram.
Note that connectors are identified by shape and color. The connectors with same shape and color are identified by labels (such as color or number) on the harness side. Also, the connectors on the PCB are described with the name of the actuator to be connected, so refer to the shape, color, label and indication on the PCB and take care not to misconnect the connectors.

∗ After completing the work, perform an actuator check to check for incorrect wiring.

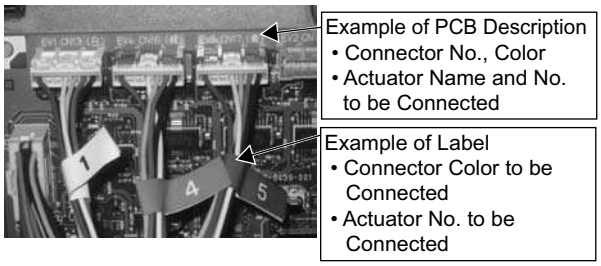

028512-00E01

Part 7
Maintenance / Service Data

1. Maintenance.....212
   1.1 Periodic Inspection Items, Quantities, and Standard Values for the Outdoor Unit.....212
   1.2 Periodic Inspection Procedure for the Outdoor Unit.....213
2. Servicing Data.....225
   2.1 Resistance/Temperature Characteristics of Various Sensors.....225
   2.2 Pressure/Voltage Characteristics of Pressure Sensors.....226
   2.3 Pressure/Saturation Temperature Conversion Chart for Outdoor Unit Pressure Sensors.....227
   2.4 Tightening Torque Table.....228
   2.5 Standard Operation Data (Reference Values).....230

1. Maintenance

1.1 Periodic Inspection Items, Quantities, and Standard Values for the Outdoor Unit

Table 7.1/ Periodic inspection items for the outdoor unit

▽: inspect/clean/adjust, ○: refill, ●: replace

Inspection/servicing item		Initial	10,000 hours	20,000 hours
Engine related parts	Engine oil	▽	○*1	●
	Engine oil filter	—	●	●
	Air cleaner element	—	●	●
	Spark plug	—	●	●
	Valve clearance	—	▽	▽
	Cooling water (including antifreeze fluid)	—	○	○
	Exhaust drain filter *2	—	○	○
	Exhaust drain filter packing	—	●	●
	Exhaust drain oil absorbing mat	—	●	●
Drive-train	Fuel hose	▽	▽	●
	V ribbed belt	▽	●	●
	Cooling water hose	▽	▽	▽
Compressor	Noise level	▽	▽	▽
	Refrigerant/refrigerating machine oil leaks	▽	▽	▽
Outdoor units	Noise and vibration	▽	▽	▽
	Rust, shakiness, peeled acoustic absorbent	▽	▽	▽
	Filter (control box)	▽	●	●

∗ 1.Replacement may be required depending on the operating conditions.
∗ 2.Refill neutralizer if low. Wash if significantly stained.

[NOTES]
- The initial inspection takes place one year after the installation.
- The unit must be inspected at least once in 5 years, regardless of whether or not the unit reaches 10,000 hours of operating time within that period.

Table 7.2/ Quantities and standard values

Model			GYEQ20AN	GYEQ30AN
Engine oil *1			38 L	50 L
Engine oil filter			1 pc	
Air cleaner element			1 pc	
Spark plug	Quantity		3 pc	4 pc
	Gap		$0.45^{+0}_{-0.1}$ mm	
Valve clearance			Cold state: 0.3±0.05 mm (intake/exhaust)	
Cooling water (antifreeze fluid concentration: 50%) *1			23 L	29 L
Exhaust drain filter	Filtering stones *1		6 kg	
	Packing		1 pc	
	Oil absorbing mat		3 sheets	
Fuel hose			1 pc	
V ribbed belt	Compressor		1 pc	
V ribbed belt tension Denso BTG-2 (N)	Compressor	Replacement	740±40	
		Inspection	600±30	
Filter (control box)			1 pc	

∗ 1.The table indicates the maximum anticipated quantities for replacement or refilling.

1.2 Periodic Inspection Procedure for the Outdoor Unit

When periodically inspecting the outdoor unit, follow the safety precautions given below.
Also, make the customer aware that the outdoor unit is under periodic inspection, using "Under Periodic Inspection" notices attached to the indoor remote control units and power breakers.

[Basics]

■ **Safety precautions**

Warning

- Turn off the power to the outdoor unit.
  Otherwise you may get an electric shock or be caught or jammed in rotating parts when the unit is inadvertently operated from a remote control unit.
  When inspecting the outdoor unit with the power ON is unavoidable, everyone must be warned and made aware that the outdoor unit is under inspection.
- After turning off the power to the outdoor unit, make sure that none of the LEDs on the outdoor unit's circuit boards are lit.
  Even though the main power has been turned OFF, attempting to access the circuit boards with any LED lit could result in an electrical shock due to electricity remaining in the circuit.
- Close the fuel gas cock.
  Otherwise a gas leak may occur when you replace fuel system parts.
- The cooling water remains hot for some time after the engine is stopped. Do not attempt to open the radiator cap until the cooling water temperature is low enough.
  Otherwise the cooling water may spout out, possibly resulting in a burn.

Caution

- The outdoor unit has various fluids that remain hot for some time after it stops operation, such as the cooling water and engine oil. Take care when draining such fluids.
- Take care not to touch parts that remain hot for some time after the unit is stopped.

■ **Safety precautions for inspection**

- After replacing a part, any parts (such as harnesses/cables and hoses) that were connected with the old part must be connected to the new part by exactly restoring the original path, clamping method, position, and so on. They must not contact edges or vibrating areas.
- Take care not to spill engine oil, cooling water, and so on.

[Tasks upon completion of periodic inspection]

After you have finished periodic inspection, test run the unit.
Also, clear the elapsed time since the last maintenance using the procedure given below.

■ **Clearing the elapsed time since the last maintenance**

Using the onboard checker of the outdoor unit main circuit board, perform these steps:

(1) Set (SW1) to "STOP."
(2) Press (UP), select [3], then press (NEXT).
(3) Press (UP), select [01], then press (NEXT).
(4) Press (UP), select [55], then press (NEXT).
(5) Press (UP), select [3], then press (NEXT).
(6) Press (UP), select [ON], then press (ENTER). This clears the elapsed time since the last maintenance.
(7) Reset (SW1) to "RUN."

1	Refilling or changing engine oil	
Part name	Engine oil for Yanmar genuine GHP	
Tools/materials	Oil pump, oil jug, waste cloth	
Step	Task	Remarks
(1) See "Basics" (page 213)		
(2) Check the oil level	Use the oil level gauge.	To check the oil level, insert the gauge while turning it and pull it out.
(3) Check for any leaks	**1.** Caution: The parts remain hot for some time after stopping the engine. **2.** Cylinder head cover gasket portion **3.** Oil filter **4.** Engine oil drain pan **5.** Cylinder head gasket portion **6.** Crank shaft oil seal **7.** Engine oil pan, sub-tank and connecting hose joints	• Prevent burns. • Check both visually and by finger.
(4) Determine whether to refill or change oil	Check LED5 (green) above the upper left corner of the 7-segment indicator on the main circuit board, determine whether to refill or change engine oil based on how the LED flashes: Single flash: refill Double flash: change Note that engine oil should be always changed from the 2nd periodic inspection. * If the elapsed time since the last maintenance is less than 8,000 hours, how the LED flashes (and thus whether to refill or change oil) may vary depending on the service conditions. 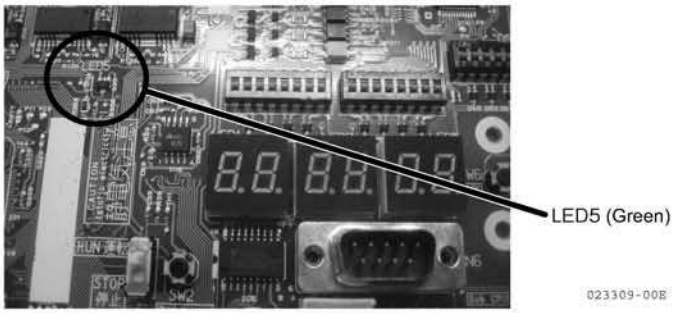	• The outdoor unit must be turned ON during this task.
(5) Drain the engine oil (only when changing it)	Using an oil pump, drain the engine oil through the engine oil pan filler port. * Be sure to drain the oil from the engine oil pan. When you do this, several liters of oil remain in the sub-tank but you do not have to drain (change) the oil remaining there. Draining the oil from the sub-tank means draining more oil than required and makes it necessary to refill more oil than usual.	• Take care to prevent burns when the engine oil is hot. • To ensure that you can fully drain oil from the engine oil pan, insert the suction hose until it contacts the bottom of the engine oil pan. • Take care not to spill the oil.
(6) Fill the oil	**1.** Through the engine oil pan filler port, fill the oil to the FULL position on the level gauge. * The FULL position on the level gauge differs depending on the model. Take care not to misread the level. (See the caution label attached to the sub-tank as well as the figure below.) **2.** After you have finished filling the oil, reinstall the cap, and check the oil level.	• Be sure to use T oil for Yanmar genuine GHP. • Open the sub-tank filler port (to make the oil level uniform).
(7) Clean the engine surroundings	Do not stain belts and hoses with oil.	
(8) Turn ON the power and open the gas cock	See "Basics" (page 213)	Check for abnormal noise.

Step	Task	Remarks
(9) Warm up the engine	***1.*** Run the engine for approximately 3 minutes. ***2.*** Stop the engine and wait for a few minutes. Then check the oil level.	Check the oil level again.

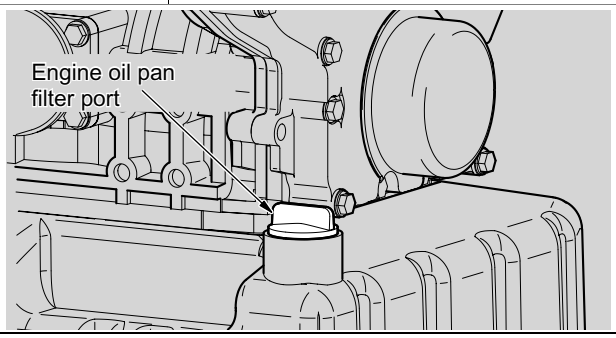

Oil level gauge reference

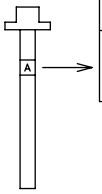

Indication	Model
A	GYEQ30AN
	GYEQ20AN

023325-00EN01

2 Replacing the oil filter

Part name	Oil filter
Tools/materials	Oil filter wrench, waste cloth, torque wrench

Step	Task	Remarks
(1) See "Basics" (page 213)		
(2) Remove the oil filter	Use an oil filter wrench. • Do not use a filter wrench when tightening the filter (this does not apply to a torque wrench).	Cover the filter with waste cloth to absorb dripping oil.
(3) Install the oil filter	***1.*** Clean the engine mounting portion. ***2.*** Apply engine oil to the O-ring mating surface. ***3.*** Tighten the oil filter. Tightening torque: 20 to 24 N·m (Use a torque wrench.) ∗ If no torque wrench is available, tighten the filter by hand, rather than using a filter wrench. A filter wrench tends to result in overtightening, which may cause such problems as breakage and oil leaks.	• Keep away from surrounding protrusions or edges. • Improve ring protection and sealability.
(4) Clean	Wipe off spilt oil.	

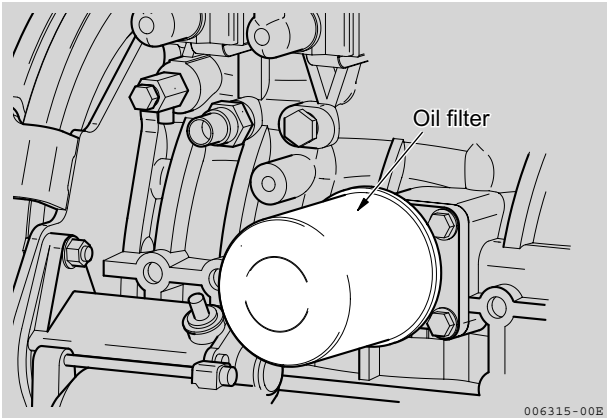

3	Replacing the air cleaner element	
Part name	Element	
Tools/materials	Waste cloth	
Step	Task	Remarks
(1) See "Basics" (page 213)		
(2) Remove the element cover and the element	***1.*** Loosen the element cover clamps, and remove the element cover and element holder. ***2.*** Remove the center wing nut, and remove the element.	• The cover is clamped with two lock plate clamps. • Take care not to drop the wing nuts or other parts.
(3) Inspect the element mounting portion	Clean the air cleaner interior and element mounting portion if stained.	
(4) Install the element and element cover	***1.*** Fit the new element with the center bolt, and tighten it with the wing nut. ***2.*** Install the element holder and the element cover with its top face (marked with an arrow) oriented upward.	• Keep away from surrounding protrusions or edges. • Take care not to drop any parts. • Clamped with three lock plates.

▼Air cleaner element mounting portion

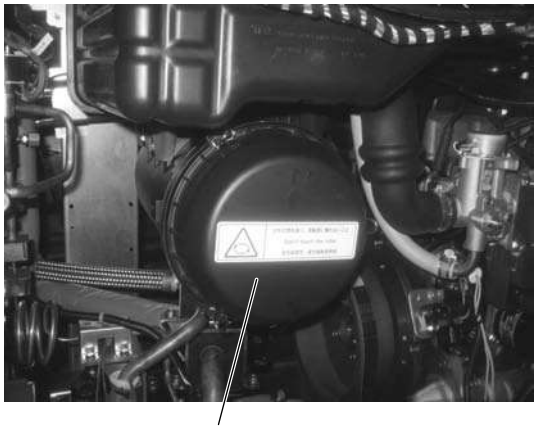

Element cover

Mount the cover with its top face (marked with an arrow) oriented upward

Center wing nut

Element

023326-00E

4	Replacing the spark plug	
Part name	Spark plug	
Tools/materials	Plug wrench (hexagon head: 16 mm), thickness gauge	
Step	Task	Remarks
(1) See "Basics" (page 213)		
(2) Remove the high voltage cord	**1.** Caution: The parts remain hot for some time after stopping the engine. **2.** Pull the cord out straight.	• Prevent burns. • Take care not to damage the connecting portion. • Take care not to hit your hands against surrounding parts when pulling out the cord.
(3) Remove the spark plug	Use a plug wrench to remove the plug.	Take care not to drop and damage the plug.
(4) Replace the spark plug (Install a new spark plug)	**1.** Check the gap using a thickness gauge. **Standard gap value**: $0.45^{+0}_{-0.1}$ mm **2.** First tighten the plug by hand and finally tighten it with a plug wrench. **Standard tightening torque value**: 24 to 34 N·m	Take care not to damage the engine-side thread ridges.
(5) Connect the high voltage cord	Plug in the cord until a click is heard.	Make sure that the connections are correct.

▼ Electrode of spark plug

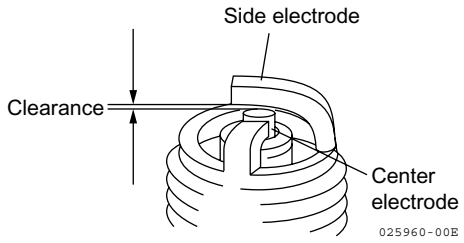

▼ Spark plug installation

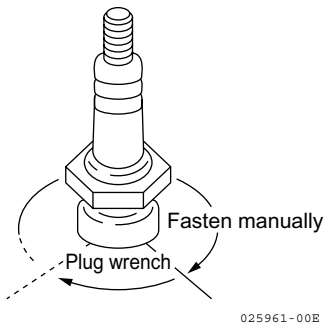

Tighten the plug with a plug wrench.

5	Adjusting the valve clearance	
Part name		
Tools/materials	Plug wrench, offset wrench, slotted screwdriver, thickness gauge, waste cloth	
Step	Task	Remarks
(1) See "Basics" (page 213)		
(2) Remove the spark plug	See "Replacing the spark plug."	To facilitate turning the crank shaft.
(3) Remove the bonnet	***1.*** Caution: The parts remain hot for some time after stopping the engine. ***2.*** Remove the breather hose. ***3.*** Loosen and remove the bonnet cover mounting bolt.	• Prevent burns. • Remove the hose from the breather cap. • Take care not to damage the rubber packing when removing the bonnet.
(4) Set the piston in cylinder NO1 to the compression top dead center	Turn the crank shaft via the pulley until the piston reaches the compression top dead center. • **Cylinder NO1 is the leftmost cylinder when viewed from the maintenance side** (flywheel side). • **Turn the crank shaft counterclockwise** (when viewed from the flywheel side).	You can determine whether the compression top dead center is reached based on the fact that the intake/exhaust valve adjusters have a play when the piston is at the top dead center.
(5) Check the current clearance	***1.*** Move the valve up/down by hand. ***2.*** Use a thickness gauge to measure the clearance.	• Wipe off oil from the portion to inspect, and measure the clearance using a thickness gauge. • Do not attempt to forcibly insert the thickness gauge when measuring the clearance.
(6) Adjust the clearance	***1.*** Loosen the lock nut. ***2.*** Use the adjuster screw to adjust the clearance. • **Standard valve clearance value** (for both intake and exhaust valves): 0.3±0.05 mm ***3.*** Tighten the lock nut.	• Fasten so that the adjuster screw does not move.
(7) Set the piston to the compression top dead center for cylinder NO2 and onward	For every cylinder from the second onward, repeat step 5.	
(8) Perform a post-adjustment check	Recheck the valve clearance after adjustment.	
(9) Install the bonnet	***1.*** Tighten the bonnet mounting bolt. ***2.*** Install the breather hose.	• Take care not to detach or damage the packing when installing the bonnet.
(10) Install the spark plug	See page 217 [Replacing the spark plug].	

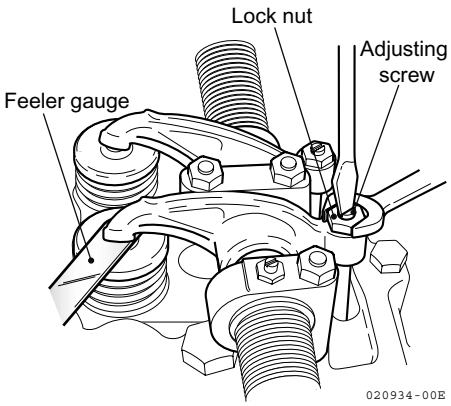

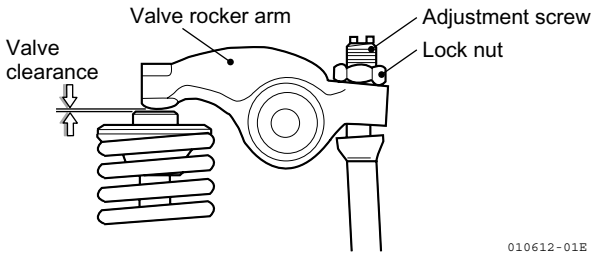

6	Inspecting the cooling water level	
Part name	Antifreeze fluid for Yanmar genuine GHP	
Tools/materials	Jug, stepladder, waste cloth, spanner	
Step	Task	Remarks
(1) See "Basics" (page 213)		
(2) Inspect the cooling water	***1.*** Through the cooling water tank level gauge (water level sight glass), check if the water level in the reservoir tank is between the FULL and LOW tick marks. ***2.*** If the water level is slightly above the LOW tick mark, check if water is leaking or if the exhaust drain water is stained with antifreeze fluid.	• Refill water if below the FULL level.
(3) Refill the cooling water	Remove the radiator cap and reservoir tank cap, then refill the cooling water.	• You can use a stepladder as needed to access the radiator cap and reservoir tank, which are positioned high above the ground, but you should take care not to fall.

▼Reservoir tank water level
Sight glass on the right side of the unit

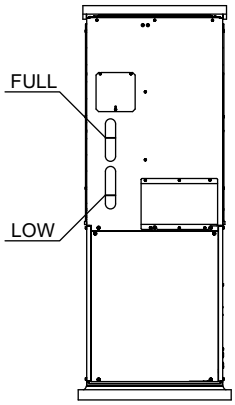

▼Reservoir tank cap position
Remove the cover on the upper right side of the unit.

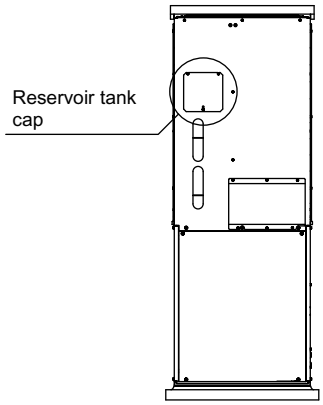

▼Radiator cap position
Remove the upper right cover in front of the unit.

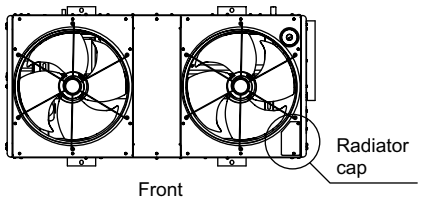

023327-00E

7	Inspecting and replacing the drain filter (neutralizer, packing, oil absorbing mat)	
Part name	Neutralizer, packing, oil absorbing mat	
Tools/materials	Spanner, pliers	
Step	Task	Remarks
(1) See "Basics" (page 213)		
(2) Check the drain filter interior	**1.** Remove the drain filter lid. **2.** Remove the oil absorbing mat. **3.** Check if there is any neutralizer remaining and the degree of contamination in the case. To check the degree of contamination, remove the remaining neutralizer from the drain filter. (This is in order to check how much the neutralizer at the bottom of the drain filter is contaminated.)	
(3) Refill neutralizer and wash the filter	**1.** If there is no neutralizer remaining, refill neutralizer. **2.** If the filter is contaminated, wash it with water or replace it.	
(4) Install the oil absorbing mat	Install the oil absorbing mat.	Carefully install the mat in place.
(5) Replace the packing	Replace the lid packing. 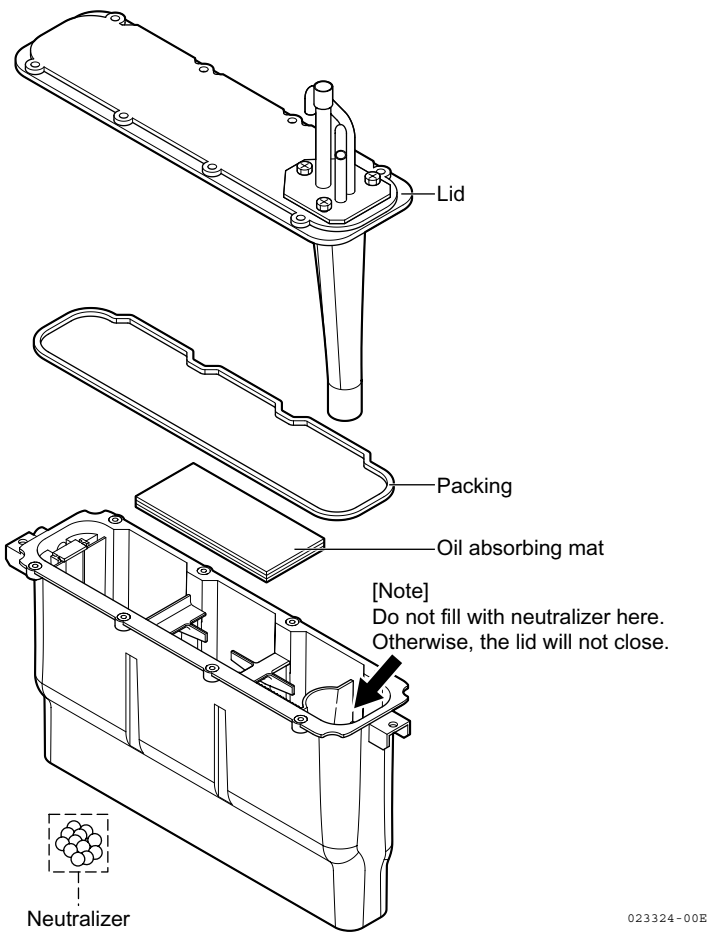 	Carefully install the new packing so that it is free from foreign matter and scratches.

8	Inspecting and replacing the fuel hose	
Part name	Fuel hose	
Tools/materials	Slotted screwdriver, soap solution, waste cloth	
Step	Task	Remarks
(1) See "Basics" (page 213)		
(2) Remove the hose bands	***1.*** Regulator mount ***2.*** Mixer mount	• Check how the band is installed. • Use a screwdriver.
(3) Remove the hose	***1.*** From between the regulator and mixer	Keep away from surrounding protrusions or edges.
(4) Inspect the hose	Visually check the hose for cracks and breaks while folding or bending it.	Replace the hose if remarkably cracked or damaged.
(5) Replace the hose (Install a new hose)	***1.*** Set the hose bands onto the hose in advance. ***2.*** Install the hose onto the mixer by completely inserting it. ***3.*** Lay the hose and fasten it with clamps or the like so that the original conditions are restored. ***4.*** Install the hose onto the regulator by completely inserting it.	• Loosen the hose bands and attach them to the hose. • Carefully lay the hose so that it does not contact any vibrating portions or edges.
(6) Tighten with a hose clip	***1.*** Regulator mount ***2.*** Mixer mount	Check how the hose bands are installed.
(7) Check for external leaks	Using soap solution, check the connecting portions (including the fuel hose joints, gas inlet bend, solenoid valve, and regulator) for external leaks.	Do this by opening the gas solenoid valve with the checker.

9	Inspecting or replacing the V ribbed belt for the compressor
Part name	V ribbed belt
Tools/materials	Spanner (14), box spanner (14, 17), offset spanner (17, 19)

Step	Task	Remarks
(1) See "Basics" (page 213)		
(2) Inspect the belt	***1.*** Visually check the belt for cracks and abnormal wear. ***2.*** Measure the belt tension. Item: Gauge value (N) <Denso BTG-2> ● Replacement: 740±40 ○ Inspection: 600±30	
(3) Remove the belt	***1.*** Loosen nut (1) on the back of the compressor bracket. ***2.*** Loosen bolt (2) on the left side of the compressor bracket. ***3.*** Loosen bolt (3) on the front of the compressor bracket. ***4.*** Loosen tension bolt (4) and the lock nut. **[GYEQ30AN]** **[GYEQ20AN]** ① 2 places ② 2 places ② 2 places ③ ④ 2 places ① 2 places ② 2 places ③ ④ 2 places 023328-00EN01 ***5.*** Swing the compressor upward, and remove the belt.	The compressor is heavy. Take care not to pinch your fingers.
(4) Install the belt	***1.*** Install the belt. ∗ The belt must be perfectly aligned with the pulley groove. ∗ The belt and pulley must be free from oil or foreign matter.	The compressor is heavy. Take care not to pinch your fingers.
(5) Adjust the tension	***1.*** Tighten the tension bolt (4) to adjust the belt tension. For the standard belt tension, see the table in (2). ∗ To adjust the tension, rotate the belt (one or two turns by hand) while measuring the tension. ***2.*** Tighten bolt (3) on the front of the compressor bracket. ***3.*** Tighten bolt (2) on the left side of the compressor bracket. ***4.*** Tighten nut (1) on the back of the compressor bracket.	
(6) Check and readjust the tension	***1.*** Measure the tension. Repeat the steps above to readjust the tension until it matches the standard value. ***2.*** Measure the tension again after running the compressor for 10 to 20 minutes. If the measured value does not match the standard value, readjust the tension.	

10	Inspecting and replacing the cooling water hose	
Part name	Cooling water hose	
Tools/materials	Slotted screwdriver, waste cloth, pliers, pinch tool	
Step	Task	Remarks
(1) See "Basics" (page 213)		
(2) Inspect the cooling water rubber hoses	***1.*** Check each hose for defects such as cracks or breaks while bending it. ***2.*** Check the hose clip portions of each hose for water leaks.	• Use this method to check each hose at portions where it can be bent. • Visually check each hose (without bending it) at portions where it cannot be bent. • Keep away from surrounding protrusions or edges.
(3) Replace the cooling water hose (Install a new hose)	***1.*** Set the hose bands onto each hose in advance. ***2.*** Perfectly insert the hose into the joint in such a manner that the clip position can be identified. ***3.*** Set each hose clip at the correct position.	• Drain the cooling water or pinch the upstream and downstream hoses with pinch tools.
▼How to fix water leaks from a hose clip portion When inspecting a system that uses hose clips, you may find, and need to fix, water leaks from a hose where it is fastened with a hose clip. If this is the case, fix water leaks by going through the following levels:		
[Level 1] Reattach the hose clip to the correct position.	***1.*** Water is likely to leak if the hose clip is not installed at a right angle to the hose. 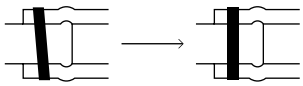 ***2.*** Water is likely to leak if the hose clip is installed too deeply. The hose clip should be installed to a portion of the hose where its outside diameter is larger than other portions. (Dimension of portion b: approximately 5 mm) 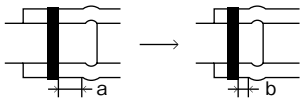 	
[Level 2] Install an additional hose band.	If performing the action in level 1 fails to fix the leaks, add an additional hose band. The hose band should be installed by fully loosening the worm (threaded) portion, rather than by pulling out the hose. 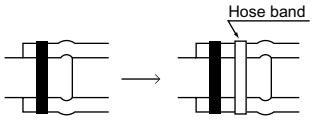 	
[Level 3] Dispose of the hose clip, and install a hose band instead.	If the action in level 2 cannot be performed due to space restrictions, move the hose clip to the hose side and install a hose band instead. 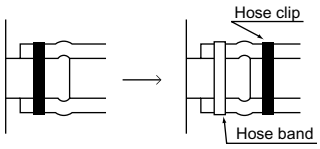 	

11	Inspecting the exhaust gas cooler	
Part name		
Tools/materials	Waste cloth	
Step	Task	Remarks
(1) See "Basics" (page 213)		
(2) Check for leaks	**1.** Exhaust gas cooler gasket **2.** Exhaust gas cooler body **3.** Check if the exhaust drain water is stained with antifreeze fluid.	Visually check.

12	Inspecting the compressor for refrigerant/refrigerating machine oil leaks and abnormal noise/vibration	
Part name		
Tools/materials	Waste cloth, soap solution, leak detector	
Step	Task	Remarks
(1) See "Basics" (page 213)		
(2) Check for refrigerant leaks	**1.** Check the flange connecting portions for leaks. **2.** Check the intake/discharge pipe outlets for leaks. **3.** Check each pipe for leaks from joints and pressure containers (such as welded areas and fusible plugs).	• Use a soap solution or leak detector.
(3) Check for refrigerating machine oil leaks	**1.** Check the refrigerant circuit for any refrigerating machine oil sticking to flange connecting portions, pipe joints, or other portions. **2.** Check the compressor's mechanical seals for leaks. **3.** Check if too much refrigerating machine oil has dripped from the drain tube. Operating Hours: 0 to 1500 hours: 0.02 L (20 cc)/1500 hours Over 1500 hours: 0.014 L (14 cc)/1500 hours 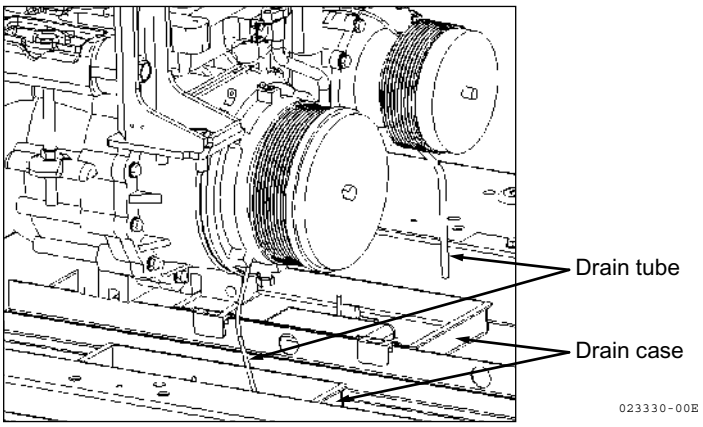 	Visually check.
(4) Turn ON the power and open the gas cock	See "Basics" (page 213)	
(5) Start up the engine	Run the engine in normal operation mode.	
(6) Check for refrigerant leaks during operation	See step (2).	Keep away from rotating parts and hot parts.
(7) Check for abnormal noise/vibration	Check for abnormal noise/vibration.	Check for squeaking noise, contact noise, and excessive vibration compared to its normal operation.
(8) Stop the engine	Stop the operation.	

2. Servicing Data

2.1 Resistance/Temperature Characteristics of Various Sensors

■ Outdoor unit sensors

Table 7.3/ List of resistance/temperature characteristics of outdoor unit sensors

Engine				Outdoor unit			
Exhaust temperature sensor		Cooling water temperature sensor		Discharge temperature sensor Oil temperature sensor (TO3)		Intake air temperature sensor Oil temperature sensors (TO1, 2, 4) Receiver temperature sensor Outdoor air temperature sensor	
Temperature (°C)	**R (KΩ)**	**Temperature (°C)**	**R (KΩ)**	**Temperature (°C)**	**R (KΩ)**	**Temperature (°C)**	**R (KΩ)**
200	30.3	-30	28.6	0	162.2	-30	363.8
250	12.4	-20	16.2	10	98.3	-25	266.8
300	5.9	-10	9.6	20	61.5	-20	197.8
350	3.1	0	5.9	30	39.5	-15	148.2
400	1.8	10	3.7	40	26.1	-10	112.1
450	1.1	20	2.5	50	17.6	-5	85.5
500	0.7	30	1.7	55	14.6	0	65.8
550	0.5	40	1.1	60	12.1	5	51.1
600	0.36	50	0.8	65	10.2	10	39.9
650	0.27	60	0.6	70	8.5	15	31.4
700	0.21	70	0.4	75	7.2	20	25.0
750	0.16	80	0.3	80	6.1	25	19.9
800	0.13	90	0.25	85	5.2	30	16.0
850	0.11	100	0.19	90	4.5	35	13.0
900	0.09	110	0.15	95	3.8	40	10.6
		120	0.12	100	3.3	45	8.7
				105	2.9	50	7.1
				110	2.5	55	5.9
				115	2.2	60	4.9
				120	1.9	65	4.1
				125	1.7	70	3.5
				130	1.5	75	2.9
				140	1.3	80	2.5
				150	0.9	85	2.1
						90	1.8
						95	1.5
						100	1.3

2.2 Pressure/Voltage Characteristics of Pressure Sensors

Fig. 7.1/ Graph of pressure/voltage characteristics of pressure sensors

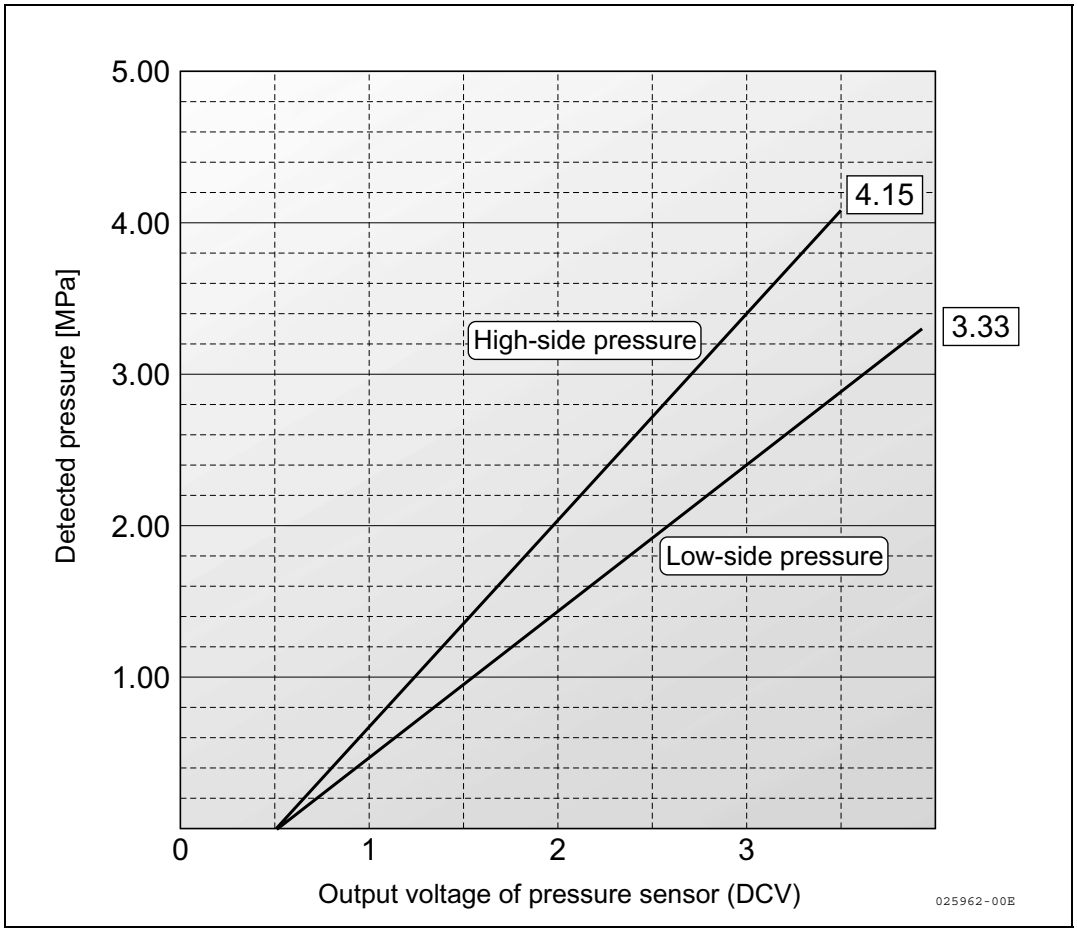

High pressure sensor		Low pressure sensor		Sensor connector No.
Pressure (MPa)	Voltage value (DCV)	Pressure (MPa)	Voltage value (DCV)	
Disconnected	5	Disconnected	5	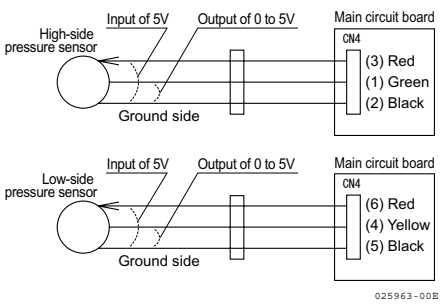
0	0.50	0	0.50	
1.41	1.52	0.84	1.35	
2.08	2.00	1.50	2.03	
2.82	2.54	2.04	2.59	
4.15	3.50	3.33	3.90	
Shorted to the 5 V side	5	Shorted to the 5 V side	5	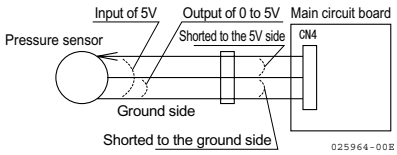
Shorted to the ground side	0	Shorted to the ground side	0	

2.3 Pressure/Saturation Temperature Conversion Chart for Outdoor Unit Pressure Sensors

Table 7.4/ Pressure/saturation temperature conversion chart for outdoor unit pressure sensors: R-410A

Pressure (P)	Saturation temperature (T)	Pressure (P)	Saturation temperature (T)	Pressure (P)	Saturation temperature (T)	Pressure (P)	Saturation temperature (T)	Pressure (P)	Saturation temperature (T)	Pressure (P)	Saturation temperature (T)	Pressure (P)	Saturation temperature (T)
MPa	°C	MPa	°C	MPa	°C	MPa	°C	MPa	°C	MPa	°C	MPa	°C
0.00	-51.5	0.60	-4.0	1.20	16.3	1.80	30.4	2.40	41.38	3.00	50.6	3.60	58.5
0.01	-49.7	0.61	-3.6	1.21	16.6	1.81	30.6	2.41	41.55	3.01	50.7	3.61	58.6
0.02	-47.9	0.62	-3.1	1.22	16.8	1.82	30.8	2.42	41.72	3.02	50.9	3.62	58.7
0.03	-46.3	0.63	-2.7	1.23	17.1	1.83	31.0	2.43	41.88	3.03	51.0	3.63	58.9
0.04	-44.7	0.64	-2.3	1.24	17.4	1.84	31.2	2.44	42.04	3.04	51.1	3.64	59.0
0.05	-43.3	0.65	-1.9	1.25	17.6	1.85	31.4	2.45	42.21	3.05	51.3	3.65	59.1
0.06	-41.9	0.66	-1.5	1.26	17.9	1.86	31.6	2.46	42.37	3.06	51.4	3.66	59.2
0.07	-40.6	0.67	-1.1	1.27	18.2	1.87	31.8	2.47	42.54	3.07	51.6	3.67	59.4
0.08	-39.3	0.68	-0.7	1.28	18.4	1.88	32.0	2.48	42.70	3.08	51.7	3.68	59.5
0.09	-38.1	0.69	-0.3	1.29	18.7	1.89	32.2	2.49	42.86	3.09	51.8	3.69	59.6
0.10	-37.0	0.70	0.1	1.30	18.9	1.90	32.4	2.50	43.02	3.10	52.0	3.70	59.7
0.11	-35.8	0.71	0.5	1.31	19.2	1.91	32.6	2.51	43.18	3.11	52.1	3.71	59.8
0.12	-34.8	0.72	0.9	1.32	19.4	1.92	32.7	2.52	43.34	3.12	52.2	3.72	60.0
0.13	-33.7	0.73	1.3	1.33	19.7	1.93	32.9	2.53	43.50	3.13	52.4	3.73	60.1
0.14	-32.7	0.74	1.7	1.34	19.9	1.94	33.1	2.54	43.66	3.14	52.5	3.74	60.2
0.15	-31.8	0.75	2.0	1.35	20.2	1.95	33.3	2.55	43.82	3.15	52.7	3.75	60.3
0.16	-30.8	0.76	2.4	1.36	20.4	1.96	33.5	2.56	43.98	3.16	52.8	3.76	60.4
0.17	-29.9	0.77	2.8	1.37	20.7	1.97	33.7	2.57	44.14	3.17	52.9	3.77	60.6
0.18	-29.0	0.78	3.1	1.38	20.9	1.98	33.9	2.58	44.30	3.18	53.1	3.78	60.7
0.19	-28.2	0.79	3.5	1.39	21.2	1.99	34.1	2.59	44.46	3.19	53.2	3.79	60.8
0.20	-27.3	0.80	3.9	1.40	21.4	2.00	34.3	2.60	44.61	3.20	53.3	3.80	60.9
0.21	-26.5	0.81	4.2	1.41	21.7	2.01	34.48	2.61	44.77	3.21	53.5	3.81	61.0
0.22	-25.7	0.82	4.6	1.42	21.9	2.02	34.67	2.62	44.93	3.22	53.6	3.82	61.2
0.23	-24.9	0.83	4.9	1.43	22.2	2.03	34.85	2.63	45.08	3.23	53.7	3.83	61.3
0.24	-24.2	0.84	5.3	1.44	22.4	2.04	35.04	2.64	45.24	3.24	53.9	3.84	61.4
0.25	-23.4	0.85	5.6	1.45	22.6	2.05	35.23	2.65	45.39	3.25	54.0	3.85	61.5
0.26	-22.7	0.86	6.0	1.46	22.9	2.06	35.41	2.66	45.55	3.26	54.1	3.86	61.6
0.27	-22.0	0.87	6.3	1.47	23.1	2.07	35.60	2.67	45.70	3.27	54.3	3.87	61.8
0.28	-21.3	0.88	6.6	1.48	23.4	2.08	35.78	2.68	45.86	3.28	54.4	3.88	61.9
0.29	-20.6	0.89	7.0	1.49	23.6	2.09	35.97	2.69	46.01	3.29	54.5	3.89	62.0
0.30	-19.9	0.90	7.3	1.50	23.8	2.10	36.15	2.70	46.16	3.30	54.7	3.90	62.1
0.31	-19.3	0.91	7.6	1.51	24.0	2.11	36.33	2.71	46.32	3.31	54.8	3.91	62.2
0.32	-18.6	0.92	8.0	1.52	24.3	2.12	36.52	2.72	46.47	3.32	54.9	3.92	62.3
0.33	-18.0	0.93	8.3	1.53	24.5	2.13	36.70	2.73	46.62	3.33	55.1	3.93	62.5
0.34	-17.4	0.94	8.6	1.54	24.7	2.14	36.88	2.74	46.77	3.34	55.2	3.94	62.6
0.35	-16.7	0.95	8.9	1.55	25.0	2.15	37.06	2.75	46.92	3.35	55.3	3.95	62.7
0.36	-16.1	0.96	9.3	1.56	25.2	2.16	37.24	2.76	47.07	3.36	55.5	3.96	62.8
0.37	-15.5	0.97	9.6	1.57	25.4	2.17	37.42	2.77	47.22	3.37	55.6	3.97	62.9
0.38	-15.0	0.98	9.9	1.58	25.6	2.18	37.60	2.78	47.37	3.38	55.7	3.98	63.0
0.39	-14.4	0.99	10.2	1.59	25.9	2.19	37.77	2.79	47.52	3.39	55.8	3.99	63.1
0.40	-13.8	1.00	10.5	1.60	26.1	2.20	37.95	2.80	47.67	3.40	56.0	4.00	63.3
0.41	-13.3	1.01	10.8	1.61	26.3	2.21	38.13	2.81	47.82	3.41	56.1		
0.42	-12.7	1.02	11.1	1.62	26.5	2.22	38.30	2.82	47.97	3.42	56.2		
0.43	-12.2	1.03	11.4	1.63	26.8	2.23	38.48	2.83	48.11	3.43	56.4		
0.44	-11.6	1.04	11.7	1.64	27.0	2.24	38.66	2.84	48.26	3.44	56.5		
0.45	-11.1	1.05	12.0	1.65	27.2	2.25	38.83	2.85	48.41	3.45	56.6		
0.46	-10.6	1.06	12.3	1.66	27.4	2.26	39.00	2.86	48.56	3.46	56.7		
0.47	-10.1	1.07	12.6	1.67	27.6	2.27	39.18	2.87	48.70	3.47	56.9		
0.48	-9.6	1.08	12.9	1.68	27.8	2.28	39.35	2.88	48.85	3.48	57.0		
0.49	-9.1	1.09	13.2	1.69	28.1	2.29	39.52	2.89	48.99	3.49	57.1		
0.50	-8.6	1.10	13.5	1.70	28.3	2.30	39.69	2.90	49.14	3.50	57.2		
0.51	-8.1	1.11	13.8	1.71	28.5	2.31	39.87	2.91	49.28	3.51	57.4		
0.52	-7.6	1.12	14.1	1.72	28.7	2.32	40.04	2.92	49.43	3.52	57.5		
0.53	-7.2	1.13	14.3	1.73	28.9	2.33	40.21	2.93	49.57	3.53	57.6		
0.54	-6.7	1.14	14.6	1.74	29.1	2.34	40.38	2.94	49.72	3.54	57.8		
0.55	-6.2	1.15	14.9	1.75	29.3	2.35	40.55	2.95	49.86	3.55	57.9		
0.56	-5.8	1.16	15.2	1.76	29.5	2.36	40.71	2.96	50.00	3.56	58.0		
0.57	-5.3	1.17	15.5	1.77	29.7	2.37	40.88	2.97	50.14	3.57	58.1		
0.58	-4.9	1.18	15.7	1.78	29.9	2.38	41.05	2.98	50.29	3.58	58.3		
0.59	-4.4	1.19	16.0	1.79	30.1	2.39	41.22	2.99	50.43	3.59	58.4		

2.4 Tightening Torque Table

Table 7.5/ Tightening torque table

[Engine - primary parts]

Portion		Screw diameter and pitch (mm)	Width across face (mm)	Lubricating oil applied (YES or NO)	Tightening torque (N·m)
Head bolts	3GPH88 3GPJ88 4GPH88	M10×1.25	14	YES	85 to 91
Flywheel mounting bolts	All models	M10×1.25	17	YES	80 to 86
Spark plug	All models	M14×1.25	16	NO	24 to 34
Exhaust gas cooler drain plug	3GPH88 3GPJ88 4GPH88	M8×1.25	12	NO	22 to 28
Exhaust temperature sensor	All models	M12×1.25	14	NO	34 to 44
Water temperature sensor	All models	M12×1.5	19	NO	9.8 to 11.8
Oil pressure switch	All models	PT1/8	—	NO	18 to 22
Lubricating oil filter	All models	M20×1.50	—	YES	20 to 24
Lubricating oil joints (sub-tank communicating tube)	All models	M27×2.0	—	NO	88 to 108

Note)For parts whose "Lubricating oil applied" field contains "YES," new engine lubricating oil must be applied to the thread and bearing surface.

[Engine - general standard bolts and nuts (with no need to apply lubricating oil)]

Portion	Screw diameter and pitch (mm)	Tightening torque (N·m)	Remarks
Hexagon head bolt (7T) nut	M6×1	10 to 12	• If the part is tightened to an aluminum part, use 80% of the torque value specified at left. • For 4T nuts and lock nuts, use 60% of the torque value specified at left.
	M8×1.25	23 to 28	
	M10×1.5	44 to 54	
	M12×1.75	78 to 98	
PT plug	1/8	10	—
	1/4	20	
	3/8	29	
	1/2	59	
Pipe joint bolt	M8	13 to 17	—
	M12	25 to 34	
	M14	39 to 49	
	M16	49 to 59	

[Outdoor unit - primary parts]

Category	Portion	Material		Size	Tightening torque (N·m)
		Bearing surface	Internal thread		
Engine related parts	Exhaust temperature sensor to engine catalyst	FC200	FC200	M12×1.25	29.4±3
	Engine pulley to engine	Iron	Iron	M10	49±5.0
	Flange catalyst case	Iron	FC250	M12	90±10
	Engine oil pan to lower joint	AL	AL	M27	60±6
Structural parts	Vibration isolation rubber to base	Iron	Iron	M10	49±5.0
	Front/back comp brackets to engine	Iron	ADC	M10	49±5.0
	Upper comp bracket to front comp support	FC250	Iron	M12	90±10
	Back comp support to back comp bracket	FC250	Iron	M10	49±5.0
	Back comp support to upper comp bracket	FC250	Iron	M14	130±13
	Compressor (MHI type) to left comp bracket	FC250	AL	M12	72±8
	Compressor (SD type) to upper comp bracket	FC250	AL	M14	104±10
	Compressor (MHI type) to upper comp bracket	FC250	AL	M10	40±4
	Gas solenoid valves to regulator	AL	AL	M4	2.8±0.3
	Gas solenoid valves to inlet pipe	Iron	AL	M4	2.8±0.3
	Propeller fan to fan motor	PPG	Iron	M10	21.6±2.2
	A/B generator brackets to engine	Iron	Iron	M10	49±5.0
	A/B generator brackets to generator	Iron	Iron	M10	49±5.0
Refrigerant system	Flanges - compressor discharge/intake (MHI type)	Bs	AL	M10 hexagon hole	40±4
	Flanges - compressor discharge/intake (SD type)	Bs	AL	M6 hexagon hole	10.8±1.0
	Flanges - upper/lower coupling and oil return	Bs	Bs	M6 hexagon hole	10.8±1.0
Electrical parts	Starter B-terminal to starter cable	Iron	Iron	M8	8.8±0.9
	Transformer to starter cable	Iron	Iron	M8	8.8±0.9
	Breaker RST to harness	Iron	Iron	M5	3.0±0.5
	Terminal block RST to harness	Iron	Iron	M4	1.2±0.1

[Outdoor unit - general standard bolts, nuts, caps]

Portion	Size	Tightening torque (N·m)	Remarks
Bolts and nuts	M4	3.0±0.5	
	M5	7.4±1.0	
	M6	10.8±1.0	
	M8	24.5±2.5	
	M10	49±5.0	
	M12	90±10	
	M14	130±13	
Flare nuts	3/8	25.5 to 29.4	
	1/2	39.2 to 44.1	
	5/8	63.7 to 69.6	
	3/4	97.2 to 118.6	
Charge plugs	1/2-20UNF	12.7±1.3	For high/low pressure side and oil (CHIYODA)
	1/2-20UNF	7±1	Stop valve (MORIKAWA)
	1/2-20UNF	13±1.3	Stop valve (NICHIDEN)
	1/2-20UNF	9.8 to 11.8	Stop valve (MIHANA)
Stop valve cap Operation valve	—	20 to 30	Stop valve (MORIKAWA)
	—	30±3	Stop valve (NICHIDEN)
	—	19.6 to 24.5	Stop valve (MIHANA)

Note1: If the internal thread is made of aluminum, use 80% of the tightening torque value specified above.

Note2: If the bearing surface is made of resin, use 60% of the tightening torque value specified above.

2.5 Standard Operation Data (Reference Values)

Table 7.6 / Standard operation data list

Operating conditions	Under 100% load with refrigerant piping length of 7.5 m		Cooling operation (reference values)		Heating operation (reference values)	
Symbols used in drawings	Part	PC checker name	GYEQ20AN	GYEQ30AN	GYEQ20AN	GYEQ30AN
A	Compressor 1 discharge temperature (°C)	Discharge temperature 1	78	80	74	76
B	Compressor 2 discharge temperature (°C)	Discharge temperature 2	78	80	74	76
C	Oil cooler inlet temperature (°C)		73	75	64	66
D	Oil separator outlet temperature (°C)		77	79	72	74
E	Oil return pipe temperature on compressor 1 side (°C)	Oil temperature 1	58	62	45	54
F	Oil return pipe temperature on compressor 2 side (°C)	Oil temperature 2	58	62	45	54
G	EV3/SV1 inlet temperature (°C)		63	55	41	38
H	EV3/SV1 outlet temperature (°C)		63	55	41	38
I	SV7 outlet temperature (°C)	Oil temperature 4	57	62	45	54
J	None		—	—	—	—
K	None		—	—	—	—
L	Intake temperature 1 (°C)	Intake temperature 1	12	11	1	1
M	Outdoor heat exchanger gas side temperature (°C)		76	78	1	1
N	Outdoor heat exchanger liquid side temperature (°C)		45	45	3	3
O	EV1 heat exchanger side temperature (°C)		45	45	3	3
P	EV2 heat exchanger side temperature (°C)		45	45	3	3
Q	EV1 receiver side temperature (°C)		44	44	23	24
R	EV2 receiver side temperature (°C)		44	44	23	24
S	Receiver inlet temperature (°C)		44	44	29	30
T	Receiver outlet temperature (°C)	Receiver temperature 31	39	39	23	24
U	Intake temperature 2 (°C)	Intake temperature 2	13	12	6	7
V	SC inlet temperature (°C)		8	7	–1	–1
W	Waste heat recovery device inlet temperature (°C)		13	13	–1	–1
X	Intake temperature 5 (°C)	Intake temperature 5	13	12	6	7
Y	None	—	—	—	—	—
Z	Waste heat recovery device outlet temperature (°C)	Intake temperature 3	13	13	20	20
a	Compressor 1 intake temperature (°C)		15	15	8	8
b	Compressor 2 intake temperature (°C)		15	15	8	8
c	Stop valve gas side temperature (°C)		13	12	5	5
d	Stop valve liquid side temperature (°C)		39	39	29	30
e	Stop valve discharge gas side temperature (°C)		13	12	71	73
—	Current speed (min^{-1})	Current speed	2100	2300	2050	2300
—	Speed set-point (min^{-1})	Speed set-point	2100	2300	2050	2300
—	Target speed (min^{-1})	Target speed	2100	2300	2050	2300
—	Throttle opening degree (pulses)	Throttle valve	400	400	210	280
—	Cooling water temperature (°C)	Cooling water temperature	84	77	65	65
—	Outdoor air temperature (°C)	Outdoor air temperature	35	35	7	7
—	EV1 opening degree (pulses)	EV1	300	100	300	360
—	EV2 opening degree (pulses)	EV2	300	400	300	360
—	EV3 opening degree (pulses)	EV3	5	5	5	5
—	EV4 opening degree (pulses)	EV4	105	135	200	280
—	EV5 opening degree (pulses)	EV5	5	5	5	280
—	EV6 opening degree (pulses)	EV6	5	5	5	5

Operating conditions	Under 100% load with refrigerant piping length of 7.5 m		Cooling operation (reference values)		Heating operation (reference values)	
Symbols used in drawings	Part	PC checker name	GYEQ20AN	GYEQ30AN	GYEQ20AN	GYEQ30AN
—	EV7 opening degree (pulses)	EV7	5	5	5	5
—	EV3A opening degree (pulses)	EV3A	5	5	5	5
—	EV3B opening degree (pulses)	EV3B	5	5	5	5
—	Refrigerant high-side pressure (MPa)	High-side pressure 1	2.92	2.94	2.40	2.45
—	Refrigerant low-side pressure (MPa)	Low-side pressure	0.93	0.90	0.68	0.68
The following illustrations indicate where each part identified by a symbol in drawings is located on the reference circuit.						

Fig. 7.2 / Standard operation data list: Locations of the parts identified by symbols in drawings (for GYEQ20AN)

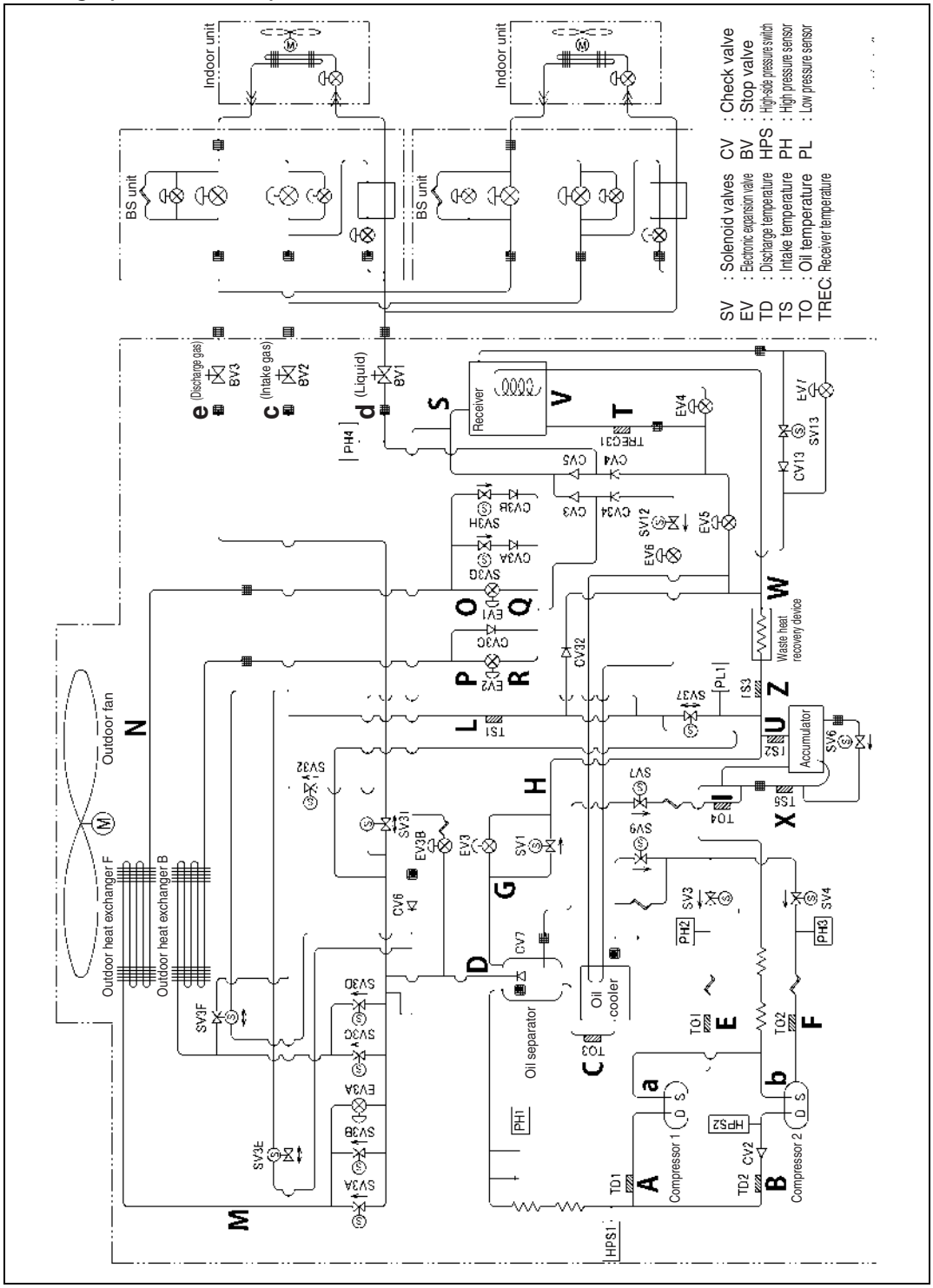

Fig. 7.3 / Standard operation data list: Locations of the parts identified by symbols in drawings (for GYEQ30AN)

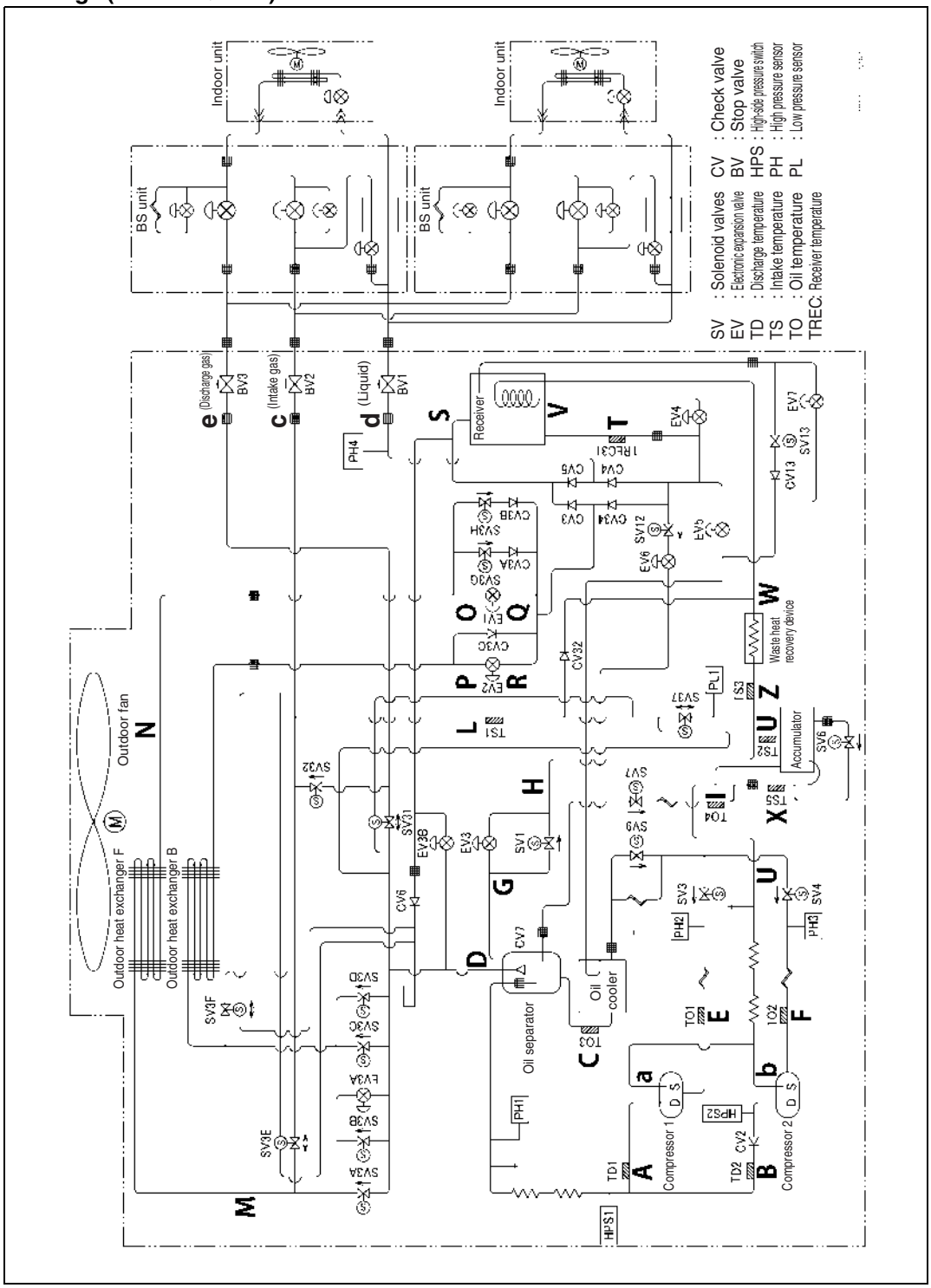

Revision History

Month / Year	Version	Revised contents
07 / 2014	SiAUY361411E	First edition
11 / 2015	SiAUY361411EA	Changes due to addition of accumulator, and revision of troubleshooting flowchart.

Warning

- Daikin products are manufactured for export to numerous countries throughout the world. Prior to purchase, please confirm with your local authorised importer, distributor and/or retailer whether this product conforms to the applicable standards, and is suitable for use, in the region where the product will be used. This statement does not purport to exclude, restrict or modify the application of any local legislation.
- Ask a qualified installer or contractor to install this product. Do not try to install the product yourself. Improper installation can result in water or refrigerant leakage, electrical shock, fire or explosion.
- Use only those parts and accessories supplied or specified by Daikin. Ask a qualified installer or contractor to install those parts and accessories. Use of unauthorised parts and accessories or improper installation of parts and accessories can result in water or refrigerant leakage, electrical shock, fire or explosion.
- Read the user's manual carefully before using this product. The user's manual provides important safety instructions and warnings. Be sure to follow these instructions and warnings.

If you have any enquiries, please contact your local importer, distributor and/or retailer.

Cautions on product corrosion

1. Air conditioners should not be installed in areas where corrosive gases, such as acid gas or alkaline gas, are produced.
2. If the outdoor unit is to be installed close to the sea shore, direct exposure to the sea breeze should be avoided. If you need to install the outdoor unit close to the sea shore, contact your local distributor.

Dealer

DAIKIN INDUSTRIES, LTD.
Head Office:
Umeda Center Bldg., 2-4-12, Nakazaki-Nishi,
Kita-ku, Osaka, 530-8323 Japan

Tokyo Office:
JR Shinagawa East Bldg., 2-18-1, Konan,
Minato-ku, Tokyo, 108-0075 Japan

http://www.daikin.com/products/ac/

©All rights reserved

●Specifications, designs and other content appearing in this brochure are current as of November 2015 but subject to change without notice.

SiAUY361411EA
11/2015 AK.K